Manual

01/23 MN048029EN

XH-303 HMI Web Panel

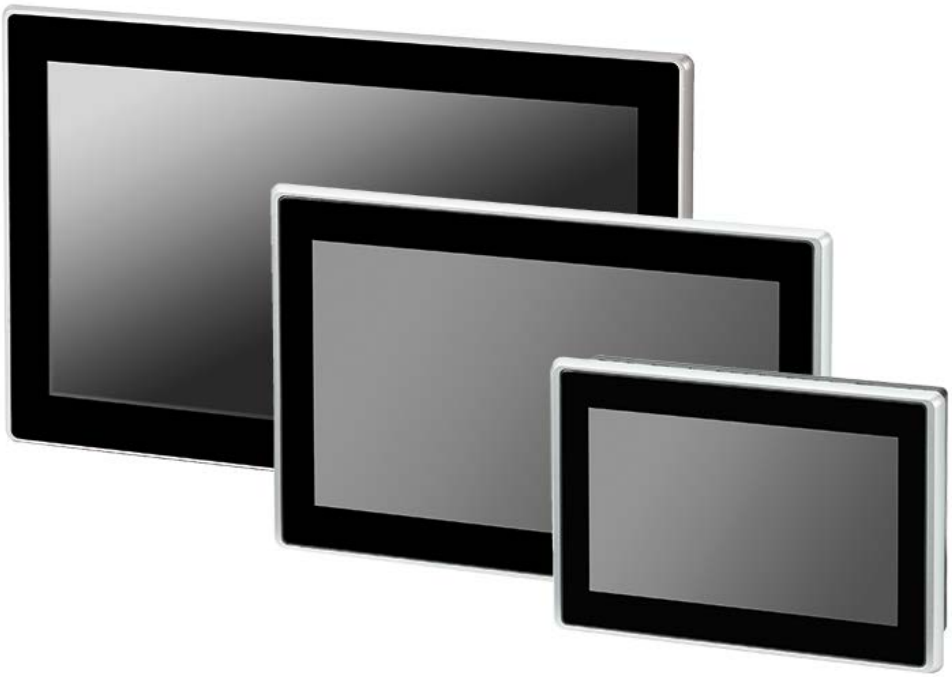

Powering Business Worldwide

Company information

All brand and product names are trademarks or registered trademarks of their respective owners.

Service

For service and support, please contact your local sales team.

Contact info.	Eaton.com/contact
Service page:	Eaton.com/aftersales

Original Operating Instructions

is the German-language edition of this document

Publication date

01/2023 Version 02

Copyright

© 2022 by Eaton Industries GmbH, 53105 Bonn

Author/editor: Antje Nonnen PMCC Division Marketing & Technical Content
Eaton Industries GmbH, Hein-Moeller-Straße 7-11, D-53115 Bonn

All rights, including those of translation, reserved.

No part of this manual may be reproduced, stored in a retrieval system, or transmitted in any form or by any means, whether electronic, mechanical, photocopying, micro-filming, recording, or otherwise, without the prior written permission of Eaton Industries GmbH, Bonn.

Subject to alteration.

DANGER!

Hazardous electrical voltage!

Before starting with the installation

- Installation requires qualified electrician
- Disconnect the power supply of the device.
- Secure against retriggering
- Verify isolation from the supply
- Ground and short-circuit
- Cover or enclose any neighboring live parts.
- Follow the engineering instructions (IL) of the device concerned.
- Only suitably qualified personnel in accordance with EN 50110-1/-2 (VDE 0105 part 100) may work on this device/system.
- Before installation and before touching the device ensure that you are free of electrostatic charge.
- The functional earth (FE) must be connected to the protective earth (PE) or to the equipotential bonding. The system installer is responsible for implementing this connection.
- Connecting cables and signal lines should be installed so that inductive or capacitive interference does not impair the automation functions.
- Install automation devices and related operating elements in such a way that they are well protected against unintentional operation.
- Suitable safety hardware and software measures should be implemented for the I/O interface so that a line or wire breakage on the signal side does not result in undefined states in the automation devices.
- Deviations of the mains voltage from the nominal value must not exceed the tolerance limits given in the specifications, otherwise this may result in malfunction and hazardous states.
- Emergency-Stop devices complying with IEC/EN 60204-1 must be effective in all operating modes of the automation devices. Unlatching the emergency switching off devices must not result in an automatic restart.
- Built-in devices for enclosures or cabinets must only be run and operated in an installed state; desktop devices and portable devices only when the housing is closed.
- Measures should be taken to ensure the proper restarting of programs interrupted after a voltage dip or outage. This should not result in dangerous operating states even for a short time. If necessary, emergency switching off devices should be implemented.
- Wherever faults in the automation system may cause damage to persons or property, external measures must be implemented to ensure a safe operating state in the event of a fault or malfunction (for example, by means of separate limit switches, mechanical interlocks, etc.).

Table of Contents

	XH-303 HMI Web Panel Manual	**1**
	Company information	2
	Before starting with the installation	3
	Table of Contents	5
0.1	About this documentation	9
0.1.1	List of revisions	9
0.1.2	Target group	10
0.1.3	Legal disclaimer	11
0.1.4	Device designations and abbreviations	11
0.1.5	Writing conventions	12
0.1.5.1	Warning labels	12
0.1.5.2	Additional information for use	13
1.	**Description**	**14**
1.1	Function	14
1.1.1	Features	14
1.2	Use as intended	16
1.3	Device models - versions and part nos.	17
1.4	Operating and indication elements	18
1.5	Interfaces to peripheral devices	19
1.6	What the different parts of the part number mean	20
1.7	Nameplate	21
1.8	Support	21
1.9	Firmware Update	21
2.	**Safety regulations**	**23**
2.1	Basics	23
2.2	Mandatory requirements, personnel requirements	24
2.2.1	Occupational safety	24
2.2.2	Personnel qualifications	24
2.2.3	Device documentation	24
2.2.4	Installation, maintenance and disposal	24

2.2.5 Prerequisites for proper operation 25
2.3 Device-specific hazards 26

3. Installation 30
3.1 Prerequisites for the location of use 30
3.1.1 Installation position 30
3.1.1.1 Temperatures 30
3.1.1.2 Aeration and de-aeration 31
3.1.1.3 Criteria for the installation position 32
3.2 Unpacking and checking the equipment supplied 34
3.3 Mounting 35
3.3.1 Fixing and sealing 35
3.3.2 Front mounting XH-303 36
3.4 Preparing the device for operation 38
3.4.1 Power supply - electrical connection 40

4. External connections 42
4.1 Layout of interfaces 43
4.2 USB interfaces 44
4.2.1 USB host 44
4.3 Ethernet 45

5. Commissioning 46
5.1 Initial commissioning 47
5.2 Running the XH-303 48
5.3 Factory-Settings 49
5.4 Rescue-Mode 50

6. Web Config Tool 51
6.1 Security 51
6.2 Handling 52
6.2.1 Local use 52
6.2.2 Remote use 52
6.2.3 Password setup 52
6.2.4 Authentication and session 54
6.3 System configuration of the device 55

6.3.1 Device menu 56
6.3.1.1 Device information 56
6.3.1.2 Power management 56
6.3.1.3 Factory reset 56
6.3.1.4 USB 57
6.3.1.5 Configure device logos 57
6.3.2 Network menu 57
6.3.2.1 Network Interface 57
6.3.2.2 DHCP 58
6.3.2.3 General settings 58
6.3.3 Screen menu 58
6.3.3.1 Timeout (in seconds) 59
6.3.4 Update menu 59
6.3.5 Date & Time menu 61
6.3.5.1 Date & Time 61
6.3.5.2 Time synchronization with NTP 61
6.3.6 Remote access menu 62
6.3.6.1 SSH 62
6.3.6.2 Device Discovery 62
6.3.7 Browser menu 63
6.3.7.1 Browser 63
6.3.7.2 VNC client 63
6.3.7.3 Additional trusted certificates 65
6.3.7.4 Homepage 65
6.3.8 Legal menu 65
6.3.9 Logs menu 66
6.4 Custom homepages 68
6.4.1 Changing the link tiles on the default homepage 69
6.4.2 Activating a custom landing page 73
6.4.3 Resetting the homepage to the default page 73

7. Make Connection 74
7.1 easyE4 as Webserver 74
7.2 Using the Web Config Tool 75

7.3 Start Web Config Tool 76
7.3.1 Steps for establishing a connection 76
7.3.1.1 easyE4 found 77
7.3.1.2 easyE4 not found. 77

8. Faults 79

9. Maintenance 80
9.1 Cleaning and maintenance 80
9.1.1 capacitive multitouch 80
9.2 Repairs 81
9.3 Storage, transport and disposal 82
9.3.1 Storage and transport 82
9.3.2 Disposal 84

Appendix 85
A.1 Technical data 86
A.1.1 Data sheets 86
A.1.2 Dimension and weight specifications 86
A.1.3 General data 89
A.1.4 Port and interface specifications 91
A.1.5 Information on the power supply 92
A.1.6 Approvals and declarations 93
A.2 Further usage information 94
Alphabetical index 95

0.1 About this documentation

This Manual contains all the information you will need in order to use the XH-303 HMI Web Panel safely and effectively.

This Manual is considered an integral part of the devices and must always be readily available in the device's close proximity so that users have access to it.

This Manual describes all of the devices' lifecycle stages: transportation, installation, commissioning, operation, maintenance, storage and disposal.
It assumes you have electrical engineering knowledge and skills.

It does not, however, go over the corresponding operating system or application software.

Make sure to always use the latest documentation for your device.

Manual XH-303 HMI Web Panel MN048029EN

The latest version of this documentation, as well as additional references, is available for download on the Internet. → Section "Further usage information", page 94

Eaton.com/documentation

Please send any comments, recommendations, or suggestions regarding this document to: DocumentationEGBonn@eaton.com

0.1.1 List of revisions

The following significant amendments have been introduced since previous issues:

Publication date	Keyword	New	Modification
06/2022	New edition		
09/2022	Correction and extension		
01/2023	UL Aproval Update Web Config Tool and Initial commissioning		page 46, 48ff

0.1 About this documentation

0.1.2 Target group

This Manual is intended for electricians and electrical engineers, as well as for the people who will be in charge of performing the electrical installation and people who will be using the XH-303 as an operating and monitoring device or as an integrated operating and control device in their own applications.

CAUTION

Installation requires qualified electrician

Follow the safety instructions for the XH-303!

The section on safety instructions must be read and understood by everyone who will be working with the XH-303 before the actual work is performed XH-303 HMI Web Panel.

WARNING

Incomplete operator manual copies

Working with individual pages taken out from the operator manual may lead to bodily injury and property damage due to missing safety information.

▶ Always work with the latest and full document.

0.1.3 Legal disclaimer

All the information in this manual has been prepared to the best of our knowledge and in accordance with the state of the art. However, this does not exclude the possibility of there being errors or inaccuracies. We assume no liability for the correctness and completeness of this information. In particular, this information does not guarantee any particular properties.

Do not use the XH-303 before reading and understanding this manual.

It is assumed that the user of this manual is thoroughly familiar with the information found in the manuals for incorporating the XH-303 into automation processes.

Hazards posed by the XH-303 cannot be eliminated if the safety instructions are not observed – especially if the XH-303 is commissioned and maintained by unqualified personnel and/or the XH-303 is used improperly. Eaton assumes no liability for any damages resulting from cases such as these.

0.1.4 Device designations and abbreviations

The following general terms are used throughout this manual:

Short designation	Explanation
XH-303	Product family with function code
XH-303 HMI Web Panel	Family
XH300	Used to refer to all the devices in the product family
XH-303	Used to refer to all front mounting devices as a group

For the exact designation for your XH-303, please refer to the→ "Nameplate", page 21.

0.1 About this documentation

0.1.5 Writing conventions

Tab. 1: Format conventions used throughout this manual

Award	Meaning
Bold text	Used for all graphical user interface elements
`Monospaced` Font format code	Used for all elements at the file level
Text	Used for the button labels
Menu path\submenu\...\item	Path information for software windows and menu pages
Menu/command	Used for commands found in the menu bar's menus
<name>	Angle brackets are used to indicate variable values that you must replace with your own values

0.1.5.1 Warning labels

Risk of personal injury warning.

DANGER

Warns of hazardous situations that result in serious injury or death.

WARNING

Warns of the possibility of hazardous situations that could result in serious injury or even death.

DANGER!

Dangerous electrical voltage!

CAUTION

Warns of the possibility of hazardous situations that can cause injury.

Property damage warning

NOTICE

Warns about the possibility of material damage.

Prohibited use

	Prohibited uses, actions, etc. Explanation

Bids

	Bid Explanation

Notes

Indicates useful tips.

Indicates instructions to be followed

Additional information, background information,
information worth knowing, useful additional information

0.1.5.2 Additional information for use

Documents (such as manuals) are listed after the icon together with the corresponding name and Eaton number.

Publication title	For identifying the Eaton publication code

External Internet addresses. They will be shown after the icon.

Destination address

1. Description

1.1 Function

XH-303 HMI Web Panels are HMI devices that communicate with various web servers through an Ethernet port.

XH-303 HMI Web Panel features an industrial high-resolution display with capacitive multi-touch technology. This, combined with a highly precise and intuitive gesture-based user interface, enables operators to start working right away. Their unmatched system performance with a powerful graphics processing unit powers a state-of-the-art user interface.

With their compact and sleek design – featuring a heavy-duty, flat, hardened glass panel – XH-303 Web Panel are ideal for industrial applications in harsh environments.

.

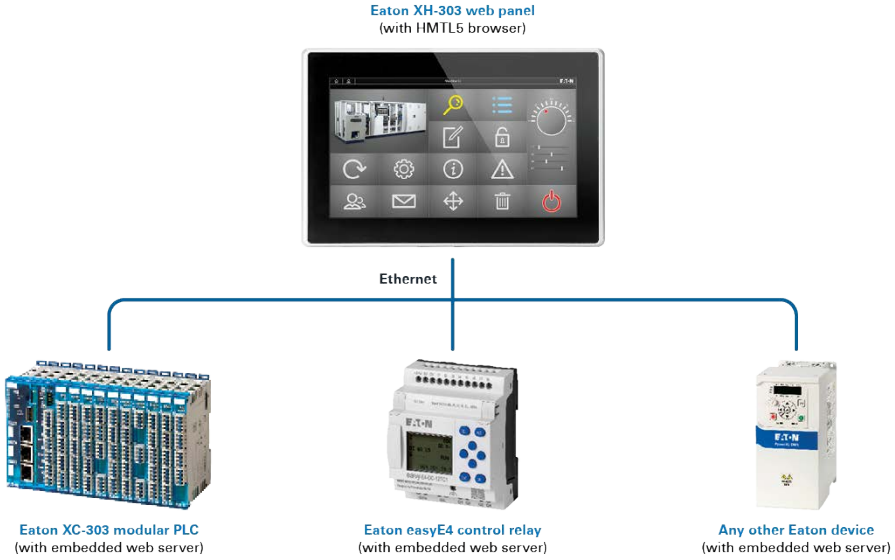

1.1.1 Features

- Stylish design – capacitive multitouch, widescreen
- Heavy-duty tempered glass; easy to clean
- Device versions for front mounting; can also be used in portrait mode
- Powerful CPU: ARM Cortex-A53, Quad-Core, 1.8 GHz
- Internal memory: 2 GB DDR4-RAM, 8 GByte eMMC
- Operating system: Linux platform from EATON for operating system/web browser and configuration

1. Description
1.1 Function

Every XH-303 Web Panel comes with the following integrated interfaces as standard:

- 1 x Ethernet (1000/100/10 Mbps) as communication interface,
- 1 x USB host 2.0 port for device servicing

1.2 Use as intended

XH-303 are primarily intended for use in machine and system building applications.

They are intended exclusively for monitoring, operating and controlling machines and systems.

Any other use must be discussed and agreed upon with the manufacturer in advance.

The XH-303 Web Panel are approved for use in closed spaces.

Bid

The XH-303 Web Panel must be used only in locations for which the XH-303 Web Panel is approved. Make sure to read and follow the information and labels on the nameplate for the XH-303 Web Panel, as well as section Approvals and declarations in the appendix.

Prohibited uses, actions, etc.

It is strictly prohibited to use the device in order to implement safety-relevant functions (in the sense of personal and machine protection).

1.3 Device models - versions and part nos.

All XH-303 Web Panels are designed for front mounting (in which they are inserted into the enclosure from the front) and feature the Linux platform from EATON for operating system/web browser and configuration operating system. Every XH-303 Web Panel comes with the following integrated interfaces as standard:

- 1 x Ethernet (1000/100/10 Mbps) as communication interface,
- 1 x USB host 2.0 port for device servicing

The following display sizes are available in order to ensure that the unit will best meet the needs of the application at hand:

Display	XH-303-70-A10-A00-2B	XH-303-10-A10-A00-2B	XH-303-15-A10-A00-2B
Display - Type	Widescreen color display, TFT, Multifinger touch		
Screen diagonal	7.0" (17.78 cm)	10.1" (25.65 cm)	15.6" (54.6 cm)
Resolution	1024 x 600 pixels	1280 x 800 pixels	1366 x 768 pixels
Visible screen area	154 x 86 mm	217 x 136 mm	344 x 194 mm

1.4 Operating and indication elements

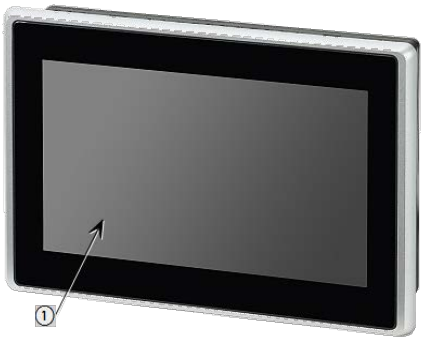

Front XH-303: hardened glass in plastic frame

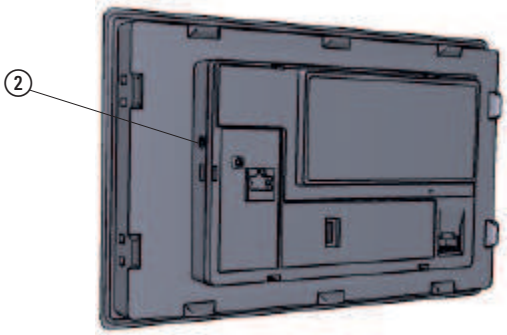

Back of XH-303 with ports and connectors

1	Display,	Operator control and display element The device is operated with touch gestures – Multifinger touch for the elements displayed.
2	CTRL	Button The button's function will depend on the software being used – for activating the "Config Tool" software

1.5 Interfaces to peripheral devices

The interfaces featured by your XH-303 will depend on theXH version selected and cannot be modified.

The nameplate will indicate which specific interfaces are included with the unit.

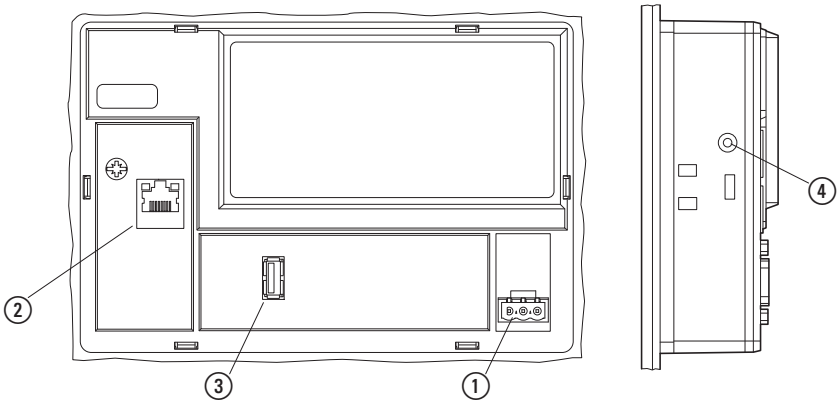

Fig. 1: Interfaces

Interfaces Basic equipment (all XH-303 models)

	Interface	Version
1	24 VDC supply voltage	Plug connector MSTB 2.5/3-ST-5.08
2	Ethernet 1	RJ-45 socket, 8-pole, 2 LEDs (CAT5e/6), LAN1, 1000/100/10 Mbps
3	USB host	USB 2.0, not galvanically isolated, plug type A, Full power (500 mA)
4	CTRL	Button - to activate the "Config Tool" software

1.6 What the different parts of the part number mean

The Part number includes information that specifies the version and model of the specific device being used.

The Part number can be found at the type plate of the XH-303 Web Panel.

XH-303	-	Display size	-	Interfaces		-	Version		-	2B
		..		A10	Basic		A00	Standard		

Tab. 2: Display size (screen diagonal)

..	
70	7.0" (17.78 cm),
10	10.1" (25.65 cm)
15	15.6" (54.6 cm)

1.7 Nameplate

The device has a nameplate on rear.
This nameplate includes the following information:

- Manufacturer
- Part number
- Part-No.
- Version
- Date of manufacture
- Required power supply
- Serial-No.
- Type approval and certification marks and information
- Layout of ports/interfaces and controls

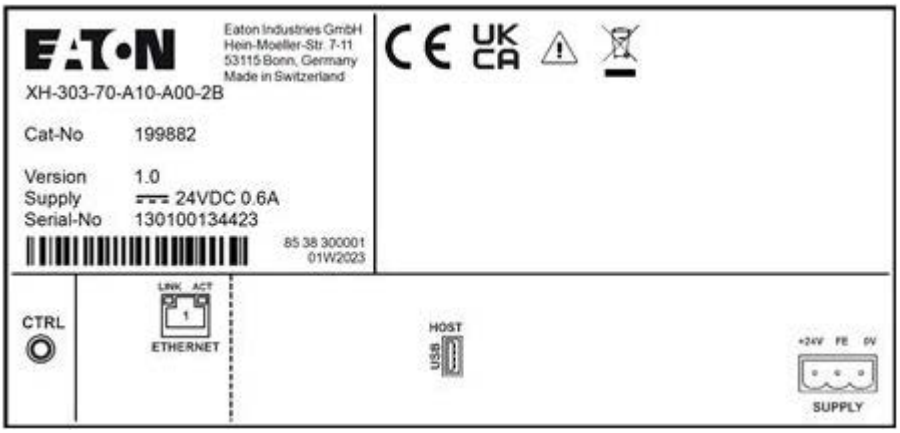

Fig. 2: Example for a nameplate

1.8 Support

To get fast and effective support, make sure to always provide Customer Service with the following information from the nameplate:

- Part-No.
- Serial-No

1.9 Firmware Update

Firmware updates are provided by Eaton Industries GmbH, Bonn in the Download Center - Software under OS Updates (Firmware updates) as *.zip files.

This *.zip file contains an operating system version and a bootloader version as well as a rescue operating system.

After unpacking, the individual files are available for their application purpose as *raucb bundles. For further information please refer to the release note description for download.

Eaton.com/Software

2. Safety regulations

2.1 Basics

The device has been designed according to the state of the art and all generally accepted safety rules and standards. However, this alone cannot eliminate all potential hazards, which is why it is necessary for you to be aware of all hazards and residual risks.

Do not run the device unless it is in perfect technical condition. Make sure to always operate it as specified in this document and for the intended purpose.

Follow the safety instructions for the XH-303!
The section on safety instructions must be read and understood by everyone who will be working with the XH-303 before the actual work is performed XH-303 HMI Web Panel.

NOTICE
Pay attention to the hazard severity levels used throughout this documentation whenever a hazard is indicated. The hazard symbol and signal word used and the corresponding text will provide information regarding the specific hazard and how to avoid or prevent it.

2.2 Mandatory requirements, personnel requirements

2.2.1 Occupational safety

All generally accepted occupational health and safety rules and standards (internal and national) must be complied with, as must be all applicable laws and regulations in the relevant country.

2.2.2 Personnel qualifications

The personnel responsible for installation, operation, maintenance and repairs must have the necessary qualifications for the work they will be performing. They must be appropriately trained and/or briefed and be informed of all hazards and risks associated with the device.

2.2.3 Device documentation

This manual is considered an integral part of the XH-303 Web Panel and must always be readily available in the device's close proximity so that users have access to it.

Make sure that every person who will be working with the XH-303 Web Panel, regardless of the lifecycle stage involved, has read and understood the relevant parts of the documentation for the XH-303 Web Panel.

Additional parts of the documentation and information for the XH-303 Web Panel, including the installation instructions, can be found at the Eaton Download Center - Documentation and at the product pages on the Internet

Eaton.com/documentation

Eaton.com/XH300 HMI Web Panel

WARNING

Incomplete operator manual copies

Working with individual pages taken out from the operator manual may lead to bodily injury and property damage due to missing safety information.

- Always work with the latest and full document.

2.2.4 Installation, maintenance and disposal

Make sure that the XH-303 is connected, installed, serviced and disposed of professionally and in line with all relevant standards and safety rules.

CAUTION

Installation requires qualified electrician

Important!

Dispose of recyclables as required by your local recycling regulations.

XH-303 Web Panel no longer being used must be professionally disposed of as per local standards or returned to the manufacturer or relevant sales department.

2.2.5 Prerequisites for proper operation

In order for the device to be able to meet the contractually stipulated terms, the following must be observed:

- Only qualified personnel should be allowed to work with the XH-303 Web Panel.
- The personnel working with the XH-303 Web Panel must have read the manual and must follow all the instructions in it.
- The required ambient conditions must be met.
- Maintenance work must be carried out correctly.

Make sure to read the → "Legal disclaimer", page 11.

We assume no liability for damages, consequential damages and/or accidents caused by the following:

- Failure to follow any applicable occupational health and safety rules, standards and/or regulations
- Device failures or function disturbances
- Improper use and/or handling
- Not following the instructions or observing the information in the documentation for the XH-303 Web Panel
- Alterations, changes and repairs to the XH-303 Web Panel

2.3 Device-specific hazards

CAUTION
DESTRUCTION
The XH-303 should only be opened by the manufacturer or by an authorized center. Operate the XH-303 until only with the enclosure fully closed and sealed.

CAUTION
ELECTROSTATIC DISCHARGE
Do not touch components (e.g., connector pins) that are electrostatic-sensitive.

- Discharge any static electricity from your body before touching the XH-303 (e.g., by touching an earthed metal object).

Electrostatic discharges may damage or ruin assembly parts.
Because of this, it is necessary to take precautions whenever handling the cards.
Please refer to the guidelines for electrostatic-sensitive components for more information (ESD guidelines).

CAUTION
INTERFERENCES
The values specified in the technical data, as well as the device's electromagnetic compatibility (EMC), cannot be guaranteed if the following are used: unsuitable cables, improperly assembled and terminated cables and/or wiring that does not conform to the applicable standards.
Only use cables assembled and terminated by professionals.
The cables being used must be assembled and terminated as required by the port/interface description in this document.
When wiring the XH-303 Web Panel, follow all instructions regarding how to wire the corresponding port/interface.
All general Directives and standards must be complied with.

CAUTION
INTERFERENCES
Screw all plug-in connections or lock them into place in order to improve screening.
Signal cables must not be routed in the same cable duct with power cables.
Before putting the system into operation, check all cable connections

to make sure that everything has been wired properly.
Make sure that all voltages and signals have the required values as specified in the technical data.

CAUTION
SAFELY DIVERTING ELECTRICAL INTERFERENCE CURRENTS
XH-303The must be connected to a central earth point with a conductor that is as short and has as low a resistance as possible.

- Ground connection characteristics:
  Wire cross-sectional area ≧ 1.5 mm², length ≦ 350 mm

The XH-303 needs to be connected to the conductive structure in, e.g., the control panel using the central earth point (earthing screw). This method of earthing is mandatory required for proper function.

DANGER
STRAY CURRENTS
Large equalizing currents between the functional earthing system and the ground system of different devices may result in fire or in malfunctions due to signal interference.

▶ If necessary, route an equipotential bonding conductor, with a cross-sectional area that is several times larger than that of the cable shielding, parallel to the cable.

CAUTION
NON-GALVANICALLY-ISOLATED INTERFACES
The XH-303 may be damaged by potential differences.

▶ The GND terminals of all bus modules must be connected.
▶ Do not connect the connector to the XH-303 or disconnect it without first de-energizing the system.

CAUTION
SHORT-CIRCUIT HAZARD
If the XH-303 Web Panel is or has been exposed to environmental fluctuations (ambient temperature, air humidity), condensation may form on or inside XH-303. As long as this condensation is present, there will be a short-circuit hazard.
Do not switch on the XH-303 Web Panel when it has condensation in or on it.
If the XH-303 Web Panel has condensation in or on it, or if the panel has been exposed to environmental fluctuations, let the XH-303 settle

into the existing ambient temperature before switching it on. Do not expose the XH-303 Web Panel to direct thermal radiation from heating appliances.

CAUTION
UV LIGHT
Plastics will become brittle when exposed to UV light. This artificial aging will reduce the XH-303 unit's lifespan. Protect the XH-303 unit from direct sunlight and other sources of UV radiation.

CAUTION
POINTY, SHARP OBJECTS AND CORROSIVE LIQUIDS
When cleaning the XH-303:

- Do not use any pointy or sharp objects (e.g., knives).
- Do not use aggressive or abrasive cleaning products or solvents.

Make sure that no liquids get into the XH-303 unit (short-circuit hazard) and that the XH-303 unit is not damaged in any way.

CAUTION
INSTALLATION CUT-OUT
The mounting cutout must be located in a position that will not defeat the purpose of stabilizing webs or other reinforcing elements in the control panel. If necessary, reinforcing elements must be installed/added.
An IP65 degree of protection will only be ensured if there is sufficient stiffness, the device is properly mounted using the original fixing material and the gasket has a proper seat

- Minimum sheet thickness of control cabinet where the device will be flush mounted:
  2 mm (0.08") ≦ d ≦ 5 mm (0.2")

CAUTION
When using commercially available peripheral devices (e.g., with the USB port), it is important to keep in mind that their EMC interference immunity parameters may render them unsuitable for use in industrial environments.
The USB port on the XH-303 Web Panel is intended exclusively for maintenance work.

WARNING

The device should only be run with safety extra-low voltage (functional extra-low voltage with protective separation).
The power transformer must conform to the relevant standards.

CAUTION

FORCES ON THE ETHERNET INTERFACE

Communications may be affected and the connection's mechanical components may be damaged, if the Ethernet interface is subjected to strong vibrations or the RJ45 plug-in connection is subjected to pulling.

- Protect the RJ45 plug-in connection from strong vibrations.
- Protect the RJ45 plug-in connection from tensile forces at the socket.

CAUTION

Installation requires qualified electrician

3. Installation

3.1 Prerequisites for the location of use

The XH-303 must be used only in locations for which the XH-303 is approved.

A 24 VDC supply voltage must be ensured as per the specifications.

See also Label on the → "Nameplate", page 21
as well as the specifications in the appendix → Section "Technical data", page 86

3.1.1 Installation position

The following must be taken into account when selecting the installation position:

- The controls and connectors on the XH device's service side must remain accessible even after the device has been installed.

3.1.1.1 Temperatures

Make sure that the XH-303 does not overheat.

Do not expose the XH-303 to direct sunlight or other sources of heat.
The minimum clearance to components emitting heat, such as transformers under heavy loads, is 15 cm.

CAUTION
UV LIGHT
Plastics will become brittle when exposed to UV light. This artificial aging will reduce the XH-303 unit's lifespan. Protect the XH-303 unit from direct sunlight and other sources of UV radiation.

The environmental ambient conditions for operation must not exceed the specified values:

Ambient climatic conditions	
Air pressure (in operation)	795 - 1080 hPa
	Max. 2000 m above sea level
Temperature	
Operation	ϑ: ± 0 – +50 °C (+32 – +122 °F)
Mounting position	XH-303-70-A10-A00-2B, XH-303-10-A10-A00-2B α ≦ ± 45°, T ≦ 50 °C (122 °F) XH-303-15-A10-A00-2B α ≦ ± 10°, T ≦ 50 °C (122 °F) α ≦ ± 45°, T ≦ 45 °C (113 °F) Inclination from vertical: α ≦ ± 45° at operating temperature ≦ 45°C (113°F) possible (if using natural convection)

Ambient climatic conditions	
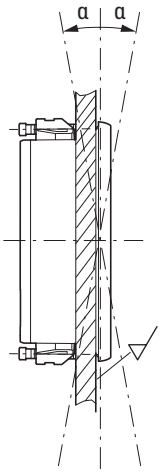	
Storage / Transport	ϑ: -20 – + 60 °C (-4 – +140 °F)
Humidity	Relative humidity 10 - 95 %
Condensation	Non-condensing

3.1.1.2 Aeration and de-aeration

- Do not block the ventilation openings when mounting the device:
  They are designed to allow the air to circulate in order to cool the XH-303 HMI Web Panel.
- The device uses natural convection-based passive cooling, i.e., it does not use fans.

Ventilation diagram

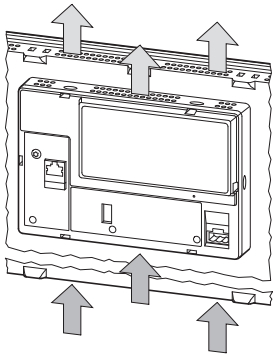

Fig. 3: Cooling air circulation

Clear Zone

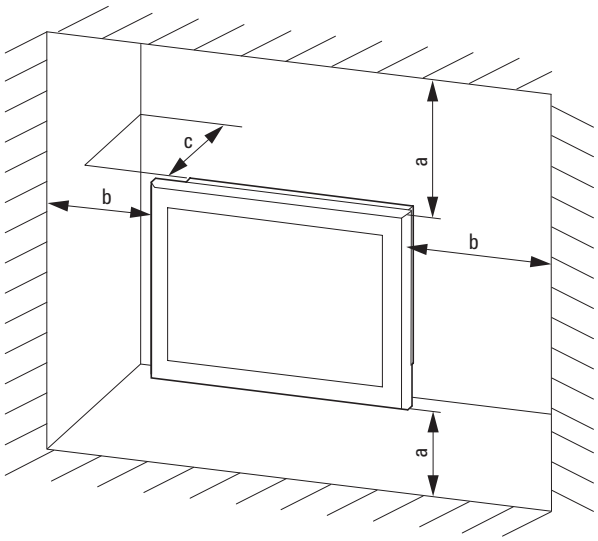

Fig. 4: Mounting distance

- Make sure that there will be enough volume for air changes inside the control cabinet, etc.
  The specified clearance around the XH-303 HMI Web Panel is: a, b, c ≧ 30 mm (1.18")

- If you will be installing the XH-303 HMI Web Panel in complex systems together with other assemblies, you must ensure that there will be enough air circulation in order to prevent overheating.
  Ambient temperature with natural convection: ϑ 0°C (32°F) ≦ T ≦ 50°C (122°F)
  The panel builder is responsible for the temperature rise calculation. Eaton will provide heat dissipation data for the XH-303 as necessary for design verification in accordance with IEC EN 61439.

3.1.1.3 Criteria for the installation position

The XH-303 are intended to be flush mounted in control cabinets, control panels, or control consoles.

- XH-303 units can be installed in landscape or portrait mode.
- If no forced ventilation is being used, the device must not be mounted at an angle α of more than ±α ≦ 45° relative to its fully vertical position.
  An angle αgreater than 10° for the XH-303-15-A10-A00-2B is only permissible with
- a reduced maximum ambient temperature of 45 °C.

- The enclosure material must be thick enough
  2 mm (0.08") ≦ d ≦ 5 mm (0.2")

Flatness ▱ ≦ 0.5 mm (0.02") at the mounting cutout with ▽ Rz ≦ 120; IP 65 → DIN ISO 2768-2 (K)

- Recommended mounting cutout for front mounting
  XH-303-70-A10-A00-2B:e = 183 mm ±1 (7.20" ±0.04), f = 122 mm ±1 (4.80"±0.04")
  XH-303-10-A10-A00-2B: e = 255,5 mm ±1 (10.06"±0.04), f = 160,5 mm ± 1 (6.32" ±0.04),
  XH-303-15-A10-A00-2B:e = 388 mm ±0.5 (15.27"± 0.02), f = 239 mm (9.40") ±0.5 mm (0.02)

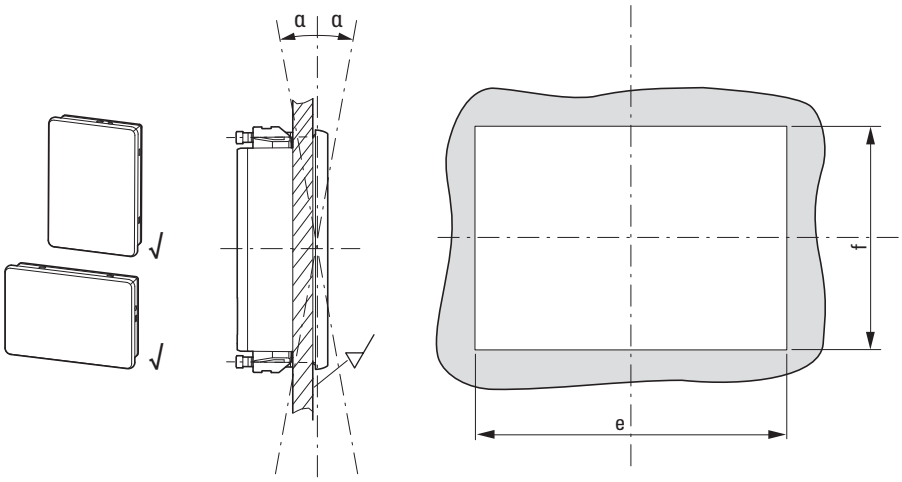

Fig. 5: Mounting position

3.2 Unpacking and checking the equipment supplied

- Check the XH-303 HMI Web Panel's packaging for transit damage.
- Carefully remove the packaging in order to avoid damaging the device.
- Check the package contents for visible transit damage.
- Use the information in Installation instructions IL048020ZU to make sure that the contents are complete.

→ Keep the original packaging so that you will be able to use it in the future if you need to transport or ship the XH-303 HMI Web Panel. Make sure to also keep the documents enclosed with the device and/or to give them to the end customer.

The package for the XH-303 comes with:

Tab. 3: Std. pack

Unit	Description
1 x	XH-303-70-A10-A00-2B, XH-303-10-A10-A00-2B, or XH-303-15-A10-A00-2B
1 x	Plug connector MSTB 2.5/3-ST-5.08
1 x	Installation instructions IL048020ZU
6 x / 10 x /12 x	Holding bracket with set screw Internal hexagon M 4 x 25 DIN 914 galvanized 6 x for XH-303-70-A10-A00-2B, 10 x for XH-303-10-A10-A00-2B, or 12 x for XH-303-15-A10-A00-2B

The XH-303 is sturdily built, but the components inside it are sensitive to excessively strong vibrations and/or mechanical shock.

Accordingly, make sure to protect the XH-303 from mechanical loads that exceed the scope of the unit's intended use.

The XH-303 should only be transported in its original packaging after being packed properly.

3.3 Mounting

NOTICE
Arrange for a professional technician to mount the device.

CAUTION
INSTALLATION CUT-OUT
The mounting cutout must be located in a position that will not defeat the purpose of stabilizing webs or other reinforcing elements in the control panel. If necessary, reinforcing elements must be installed/added.
An IP65 degree of protection will only be ensured if there is sufficient stiffness, the device is properly mounted using the original fixing material and the gasket has a proper seat

- Minimum sheet thickness of control cabinet where the device will be flush mounted:
  2 mm (0.08") ≦ d ≦ 5 mm (0.2")

3.3.1 Fixing and sealing

- Make sure to check that the Installation are being met.→ Page 32
- Make sure that the mounting cutout has the right size.
- Check the gasket for damage and make sure it is resting correctly inside the enclosure groove.

Missing parts or damage

If you notice anything wrong, please contact your distributor or Eaton Service

Contact info.	Eaton.com/contact
Service page:	Eaton.com/aftersales

3.3.2 Front mounting XH-303

Securing the panel with Holding bracket with set screw

List of tools:

- 2.0 m Allen key
- PZ2 Pozidriv screwdriver
- Torque wrench with Newton meter scale

The required holding brackets are included in the right amount as accessories with the XH-303. All the included holding brackets need to be installed!

Together with the gasket, this holding bracket is the main element involved in achieving an IP65 (at front) degree of protection.

The purpose of the holding brackets is to secure the XH-303 onto a control panel, etc. To this end, the brackets must be hooked into the enclosure sideways and screwed against the control panel door, etc.
Position the brackets in such a way that they will press against the center of the one-piece rolled gasket.

▶ Pre-install the holding brackets using the set screws.

Check that the gasket is in its correct position and pre-install the holding brackets

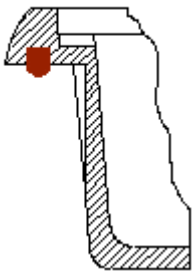

One-piece rolled gasket along the edge

Foam rubber round cord, Material NBR/PVC black, closed outer skin, diameter 3 mm (0.12")

Pre-installing the holding brackets
Screw the set screws (Internal hexagon M 4 x 25 DIN 914 galvanized) into the holding brackets

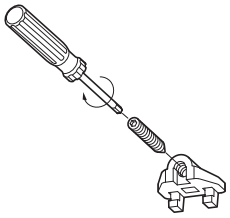

Insert the holding brackets into the enclosure

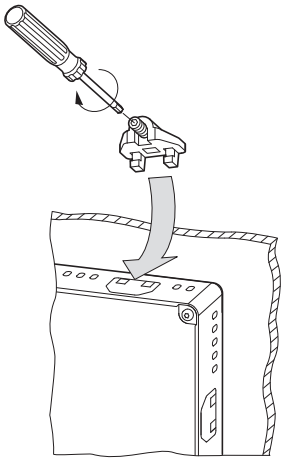

- 1. Insert the XH-303 into the mounting cutout.
- 2. Insert a holding bracket into the corresponding enclosure opening and tighten the set screw until it comes into contact with the surface of the control panel, etc.
- 3. Repeat on the opposite side.
- 4. Follow steps 3 and 4 to insert the next holding bracket at a 90° angle to the last one you inserted.
- 5. Repeat steps 3 and 4 until all holding brackets are installed.
- 6. Check that the device is in its correct, centered position and that the gasket is in contact all around; adjust if necessary
- 7. Tighten the set screws in a criss-cross sequence:
  with a torque of ≦ 0.1Nm (0.86 lb-in)

3.4 Preparing the device for operation

CAUTION
INTERFERENCES
Screw all plug-in connections or lock them into place in order to improve screening.
Signal cables must not be routed in the same cable duct with power cables.
Before putting the system into operation, check all cable connections to make sure that everything has been wired properly.
Make sure that all voltages and signals have the required values as specified in the technical data.

CAUTION
SAFELY DIVERTING ELECTRICAL INTERFERENCE CURRENTS
XH-303The must be connected to a central earth point with a conductor that is as short and has as low a resistance as possible.

- Ground connection characteristics:
  Wire cross-sectional area ≧ 1.5 mm², length ≦ 350 mm

The XH-303 needs to be connected to the conductive structure in, e.g., the control panel using the central earth point (earthing screw). This method of earthing is mandatory required for proper function.

CAUTION
SHORT-CIRCUIT HAZARD
If the XH-303 Web Panel is or has been exposed to environmental fluctuations (ambient temperature, air humidity), condensation may form on or inside XH-303. As long as this condensation is present, there will be a short-circuit hazard.
Do not switch on the XH-303 Web Panel when it has condensation in or on it.
If the XH-303 Web Panel has condensation in or on it, or if the panel has been exposed to environmental fluctuations, let the XH-303 settle into the existing ambient temperature before switching it on. Do not expose the XH-303 Web Panel to direct thermal radiation from heating appliances.

Before connecting the power supply

CAUTION
24 VDC power supply for integrated AC-to-DC converter.
The voltage being applied must meet the requirements for safety extra-low voltages (SELV) set forth in IEC 60950 and the requirements for protected extra-low voltages (PELV) set forth in ICE/UL 61010-2-201.
Pay attention to the polarity.

NOTICE
Arrange for an electrician to install the Plug connector MSTB 2.5/3-ST-5.08 and connect the power supply.

The XH-303 Web Panel has an internal fuse and protection against polarity reversal.

The power supply for the XH-303 Web Panel is not galvanically isolated.

The XH-303 Web Panel requires a rated operating voltage of 24 V DC from an AC-to-DC converter with safe isolation (SELV/PELV).

Power Supply	
Rated operating voltage	+ 24 VDC SELV (safety extra low voltage)
Permissible Voltage range	Effective: 19.2-30.0 V DC (rated operating voltage -20%/+25%)
	Absolute with ripple: 18.0-31.2 V DC
	Battery powered: 18.0-31.2 V DC (rated operating voltage -25%/+30%); 35 V DC for a duration of < 100 ms
Voltage dips	Ability to accommodate brief voltage dips ≦ 10 ms from rated operating voltage (24 V DC), ≦ 5 ms from undervoltage (19.2 V DC)
Power consumption XH-303-70-A10-A00-2B,	max. 14.4 W Power consumption at 24 V DC: 11.9 W for basic device + 2.5 W for USB module
XH-303-10-A10-A00-2B,	max. 15.4 W Power consumption at 24 V DC: 12.5 W for basic device + 2.5 W for USB module
XH-303-15-A10-A00-2B	max. 19.2 W Power consumption at 24 V DC: 16.7 W basic device + 2.5 W USB module
Fuse	Yes (fuse not accessible)
Potential isolation	No

Electrical current		**7.0" display**	**10.1" display**	**15.6" display**
	Ie	≦ 0.6 A 24 V_{DC}	≦0.64 A 24 V_{DC}	≦ 0.8 A 24 V_{DC}
	I_{TH}	< 1.0 A^2s	< 1.0 A^2s	< 1.0 A^2s

3.4.1 Power supply - electrical connection

Tab. 4: Configuration Plug connector MSTB 2.5/3-ST-5.08

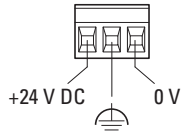

signal	Configuration
+	Specifications for connection to supply voltage + 24 VDC SELV (safety extra low voltage)
FE	Connection Functional earth
–	Supply voltage 0 V

Tab. 5: Specifications for connection to 24 VDC supply voltage

Specifications for connection to 24 VDC supply voltage	
Copper conductor	60° / 70°C
Cross-section	min. 0.75 mm^2 / max. 2.5 mm^2 (drain wire or conductor)
	min. AWG18 / max. AWG12
Tightening torque	0.6 ... 0.8 Nm (5 ... 7 lb-in) for the screws on the Plug connector MSTB 2.5/3-ST-5.08
Strip length	7 mm

Power supply

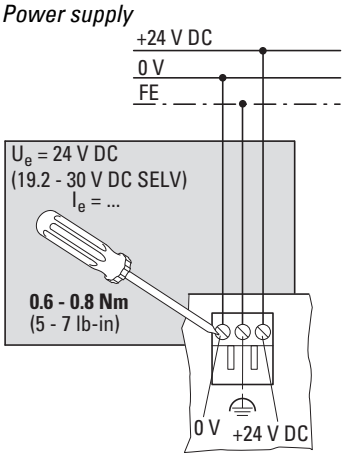

Fig. 6: Connecting the screw terminals on the Plug connector MSTB 2.5/3-ST-5.08

Electrical connection

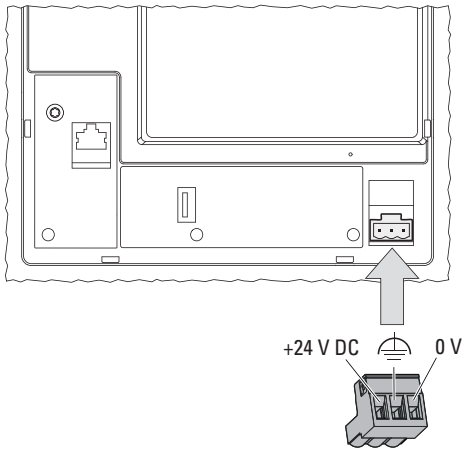

Fig. 7: Power supplied and Functional earthing through Plug connector MSTB 2.5/3-ST-5.08

- Use the Plug connector MSTB 2.5/3-ST-5.08 to terminate the connection cable for the power supply in advance.
  The torque used to tighten the screw terminals on the plug-in connection for the supply voltage must not exceed 0.6 ... 0.8 Nm (5 ... 7 lb-in).
- Plug the pre-assembled plug into the socket on the enclosure.
- Pay attention to the polarity.
- Connect the power supply cable to a 24 VDC supply voltage that meets the requirements for safety extra-low voltages (SELV) set forth in IEC 60950 and – in connection with the UL listing – the requirements for a low-voltage source set forth in UL 61010-2-201, UL61010-1.

The XH-303 is now ready to run on 24 V_{DC}.

4. External connections

With their ports, Eaton's XH-303 Web Panel make it possible to connect a variety of peripheral devices and components.

DANGER
STRAY CURRENTS
Large equalizing currents between the functional earthing system and the ground system of different devices may result in fire or in malfunctions due to signal interference.

- If necessary, route an equipotential bonding conductor, with a cross-sectional area that is several times larger than that of the cable shielding, parallel to the cable.

CAUTION
INTERFERENCES
The values specified in the technical data, as well as the device's electromagnetic compatibility (EMC), cannot be guaranteed if the following are used: unsuitable cables, improperly assembled and terminated cables and/or wiring that does not conform to the applicable standards.
Only use cables assembled and terminated by professionals.
The cables being used must be assembled and terminated as required by the port/interface description in this document.
When wiring the XH-303 Web Panel, follow all instructions regarding how to wire the corresponding port/interface.
All general Directives and standards must be complied with.

CAUTION
SAFEGUARDING
External circuits connected to devices shall be Class III (SELV/PELV) rated, double or reinforce galvanically isolated from mains supply up to 300V.

CAUTION
CONNECTION CABLE
Any communication cable (Ethernet, USB) can’t be routed outside of facility.

4.1 Layout of interfaces

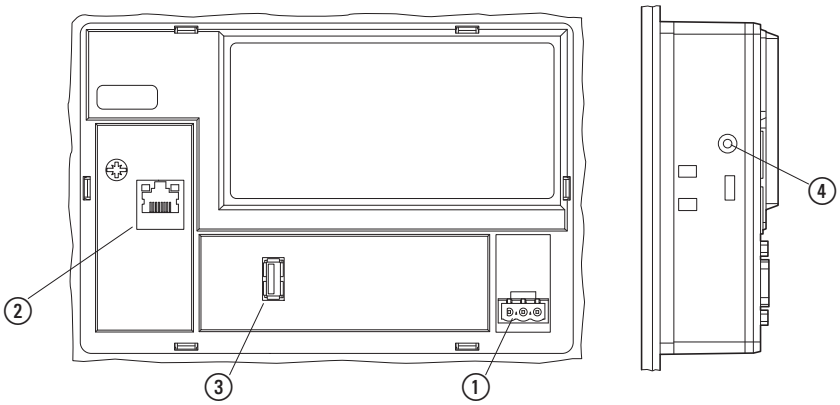

Fig. 8: Basic interfaces on all XH-303 HMI Web Panel units

	Interface	Version
1	24 VDC supply voltage	Plug connector MSTB 2.5/3-ST-5.08
2	Ethernet 1	RJ-45 socket, 8-pole, 2 LEDs (CAT5e/6), LAN1, 1000/100/10 Mbps
3	USB host	USB 2.0, not galvanically isolated, plug type A, Full power (500 mA)
4	CTRL	Button - to activate the "Config Tool" software

4.2 USB interfaces

Eaton's XH-303 Web Panel units feature ports that can be used to connect USB peripheral devices supported by the XH-303 unit's hardware and operating system.

CAUTION
When using commercially available peripheral devices (e.g., with the USB port), it is important to keep in mind that their EMC interference immunity parameters may render them unsuitable for use in industrial environments.
The USB port on the XH-303 Web Panel is intended exclusively for maintenance work.

Only use standard USB cables with a shield.
Max. cable length: 5 m.

4.2.1 USB host

Fig. 9: USB 2.0, not galvanically isolated, plug type A, Full power (500 mA)

4.3 Ethernet

The Ethernet port on the XH-303 Web Panel is used as a communication interface.

The Ethernet controllers support transfer rates of 1000 Mbit/s, 100 Mbit/s and 10 Mbit/s.
When the green LED lights up, this means that there is a LINK, i.e., that an active network is connected and has been detected.
When the yellow LED flashes, this means that data is being transferred.

Fig. 10: RJ-45 socket, 8-pole, 2 LEDs (CAT5e/6), LAN1

For the network, use shielded twisted-pair (STP) cables only.
Max. cable length: 100 m.

CAUTION
FORCES ON THE ETHERNET INTERFACE
Communications may be affected and the connection's mechanical components may be damaged, if the Ethernet interface is subjected to strong vibrations or the RJ45 plug-in connection is subjected to pulling.

- Protect the RJ45 plug-in connection from strong vibrations.
- Protect the RJ45 plug-in connection from tensile forces at the socket.

To commission the communication between the XH-303 and the device, follow the description for the connected device.

5. Commissioning

CAUTION
SHORT-CIRCUIT HAZARD
If the XH-303 Web Panel is or has been exposed to environmental fluctuations (ambient temperature, air humidity), condensation may form on or inside XH-303. As long as this condensation is present, there will be a short-circuit hazard.
Do not switch on the XH-303 Web Panel when it has condensation in or on it.
If the XH-303 Web Panel has condensation in or on it, or if the panel has been exposed to environmental fluctuations, let the XH-303 settle into the existing ambient temperature before switching it on. Do not expose the XH-303 Web Panel to direct thermal radiation from heating appliances.

▶ Apply a XH-303 to the 24 VDC supply voltage unit

The XH-303 unit will boot up.

→ The XH-303 Web Panel does not come with any runtime software for visualization or PLCs installed.

5.1 Initial commissioning

Carry out the following steps once:

establish network connection.

or

Press the CTRL button to run the Web Config Tool.

Device Info – the device informationDevice information will be shown.

Setting a language

As soon as the XH-303 is ready, the header will show the language selection drop-down menu for the Web Config Tool.

No other menus will be available without first logging in.

- Please log into the device with a password of your choice (initial password).

After logging in, the device menus will be available.

- Configure the XH-303 unit's system settings as necessary.

Fig. 11: Example showing English as the selected language

5.2 Running the XH-303

Once the XH-303 has been initially commissioned, it will run whenever it is connected to the supply voltage.

In other words, it does not have to be separately switched on and off.

→ Reducing the level of brightness will increase the display back-light's lifespan.

→ Follow the instructions in the following section if your XH-303 until will not boot up and/or if an error message appears: → Section "Faults", page 79

5.3 Factory-Settings

If it is necessary to reset to factory settings, e.g. if the password has been forgotten. This is implemented as of image version V1.0.1.

The reset to factory settings is triggered via the CTRL button.

- 1. Power off the device.
- 2. Press and hold the CTRL-button.
- 3. Power on the device.
- 4. Keep the CTRL-button pressed for at least 5 seconds but maximal 10 seconds.
- 5. Release the CTRL-button.

Device will reboot several times while doing the factory reset and will boot at the end with the original Factory-Settings.

5.4 Rescue-Mode

Starting with image version V1.0.1 a Rescue-Mode is implemented. From the versions V1.1.0 the handling was improved.

Sometimes it is necessary to bring the device into Rescue-Mode, e.g. if the device cannot boot with the installed operating system. This can happen in case of a system crash.

The purpose of Rescue-Mode is to allow the user to install a new operating system.

→ This update is only possible via the USB interface.
No other activities are allowed in Rescue-Mode.

There are two ways in which Rescue-Mode is activated

- The rescue operating system is started automatically when the device cannot start the normal operating system and switches to Rescue-Mode.
- The Rescue-Mode can be intentionally entered manually:
  - ▶ 1. Power off the device
  - ▶ 2. Press and hold the CTRL-button.
  - ▶ 3. Power on the device.
  - ▶ 4. Press and hold the CTRL button for at least 15 seconds.
  - ▶ 5. Release the CTRL-button.

  The device starts with Rescue operating system.

  → In version V1.0.1 and older the Rescue-Mode is reached by 5x disconnection of the 24V supply at startup.

In both cases, the user will see the EATON logo on the display in Rescue-Mode and the message: “Rescue mode: USB -> recovery / Button -> restart”

At this point, the user can connect a USB data carrier with the installation file → Section "Firmware Update", page 21

Once the USB data carrier is connected and the installation file starts, the new operating system is installed from the USB data carrier.
If successful, the device finally boots up with this new operating system.

→ If the user receives an error message during the installation, the procedure must be repeated with another USB data carrier.

6. Web Config Tool

This application can be used to configure any XH-303.
It can be accessed either with the local browser or with a browser installed on a connected device.

→ The following section is intended for users that have basic networking skills.

6.1 Security

The encryption uses a 2048-bit RSA key that is generated automatically on the device the first time it starts. Please note that the Web Config Tool cannot be used at all without this encryption.

The automatically generated key is self-signed. Current browsers mark self-signed certificates as insecure.
There are plans to implement the possibility of installing custom certificates in future OS versions. This will make possible to use certificates issued by a trusted certification authority.

To prevent "man-in-the-middle" attacks, the digital imprint of the certificate can be checked.

6.2 Handling

6.2.1 Local use

In order to open the Web Config Tool on the local browser, click on the top right button with the gear icon or the CTRL button on the side of the device.

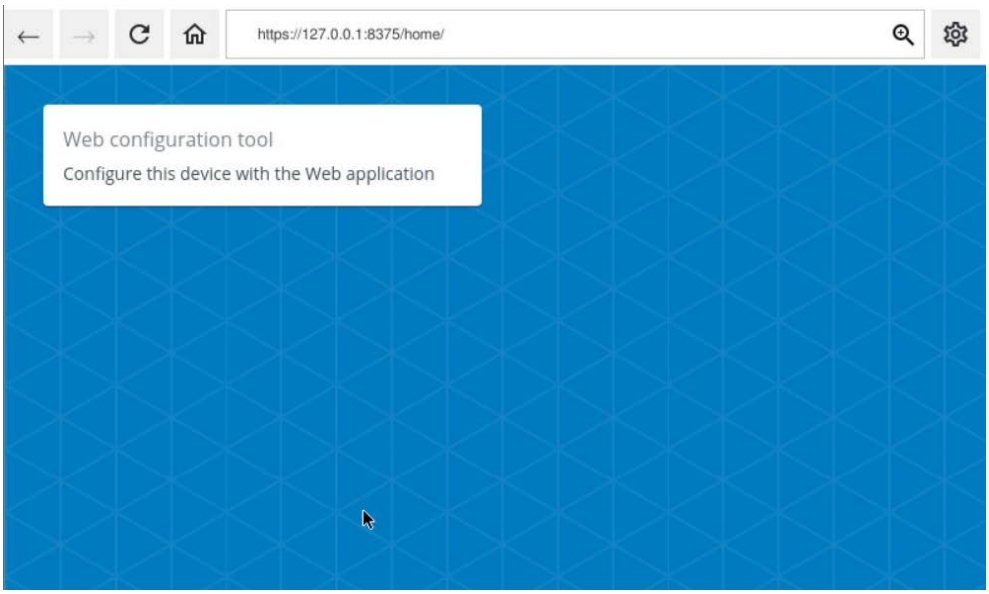

Fig. 12: Eaton Browser on the XH-303

After logging in, you can use the Web Config Tool as described below.

6.2.2 Remote use

You can also access the Web Config Tool with a remote browser (it is recommended to use an up-to-date browser).
Please note that Internet Explorer is not supported.

In order to be able to access the Web Config Tool, you must be on the same subnet as the remote browser PC and know the IP address of the device that you want to configure.

The service runs on port 8375 and uses HTTPS. This means that if the device's IP address is, for example, "192.168.1.2", the URL will be "https://192.168.1.2:8375".

6.2.3 Password setup

If you reset the XH-303 device to its factory settings, the Web Config Tool will ask you to create a password when you access the device. The following screen will appear:

Eaton Browser on the XH-303

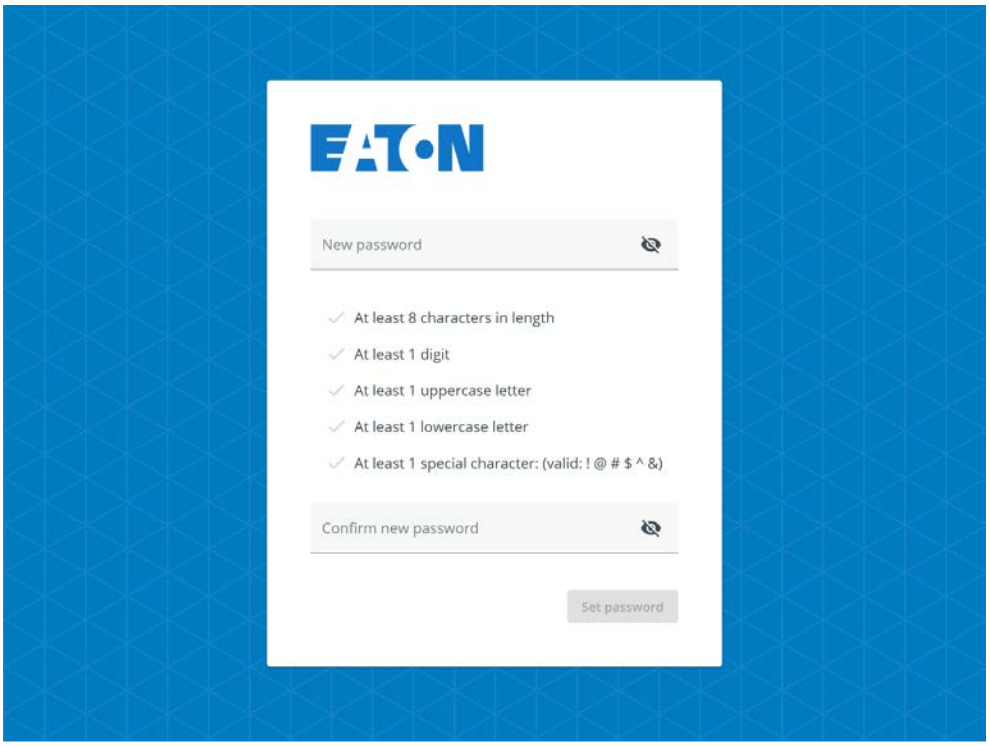

Fig. 13: Password entry

The selected password must meet all the conditions listed on the page.

- Minimum of 8 characters in length
- At least 1 number
- At least 1 uppercase letter
- At least 1 lowercase letter
- At least 1 special character (from !@#$^&)

→ Please note that the password will not be accepted unless all the above conditions are met.

The EULA must be accepted when entering the password for the first time.

Eaton Browser on the XH-303

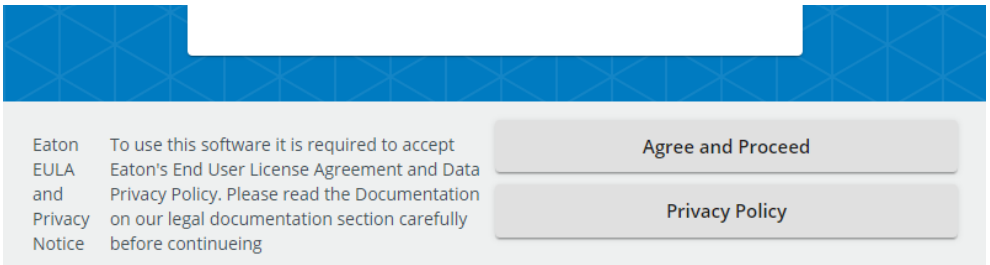

Fig. 14: EULA

6.2.4 Authentication and session

Once you create a password, the login screen will be shown every time you access Web Config Tool afterwards.

→ Passwords are created during initial commissioning.

Eaton Browser on the XH-303

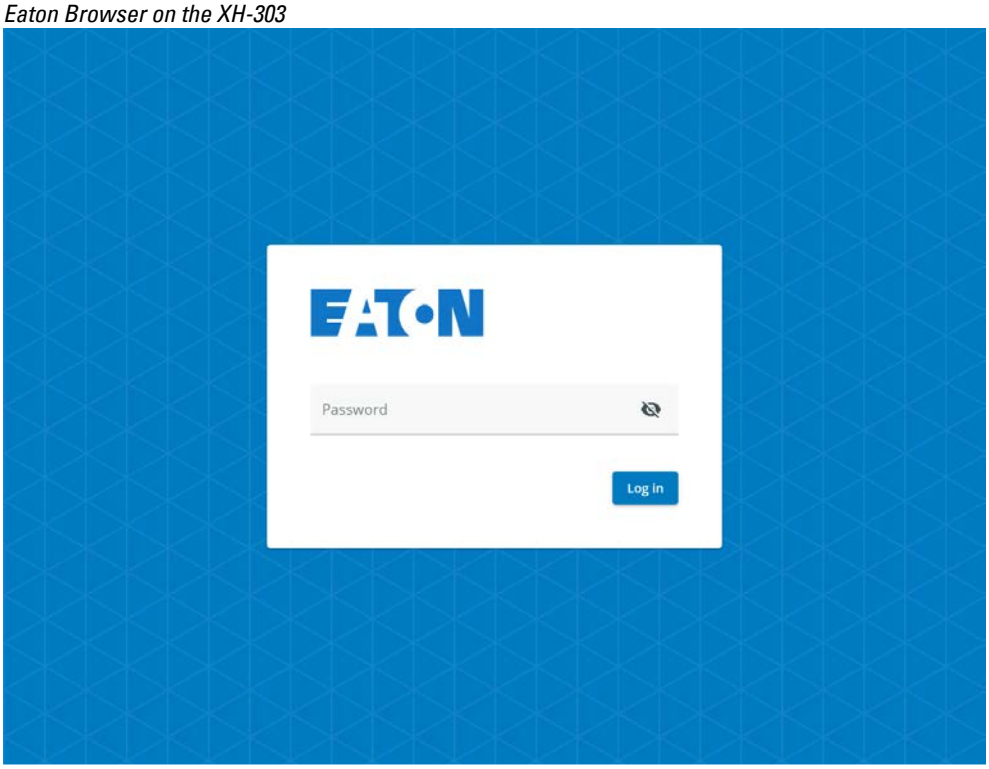

Fig. 15: Login

You can change the password in the Device menu.

▶ To log off, tap the lock button in the upper blue bar.

→ After 15 minutes of inactivity, you will be logged out automatically and the login screen will be shown with a message saying that your session expired.

Confirmation Check

The purpose of confirmation prompts is to make sure that functions are not run immediately and to require confirmation from device operators. For certain function, such as restarting the device, this will result in a dialog box asking for the aforementioned confirmation.

6.3 System configuration of the device

Eaton Browser on the XH-303

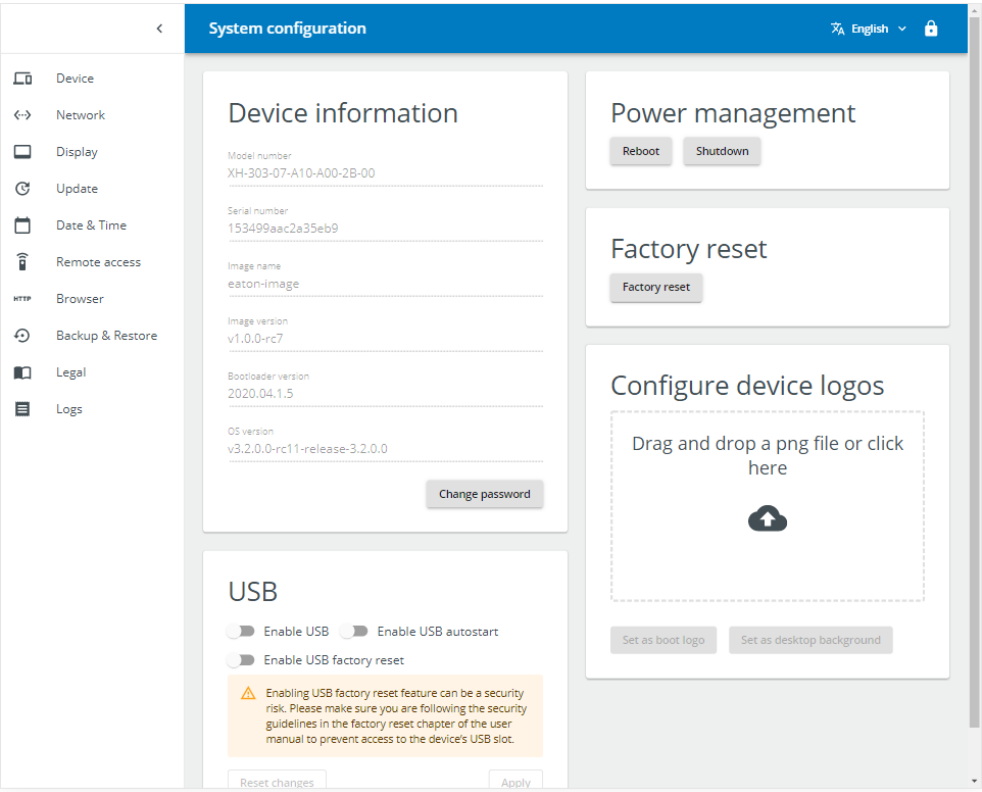

Fig. 16: System configuration with the menu open

6.3.1 Device menu

System configuration/

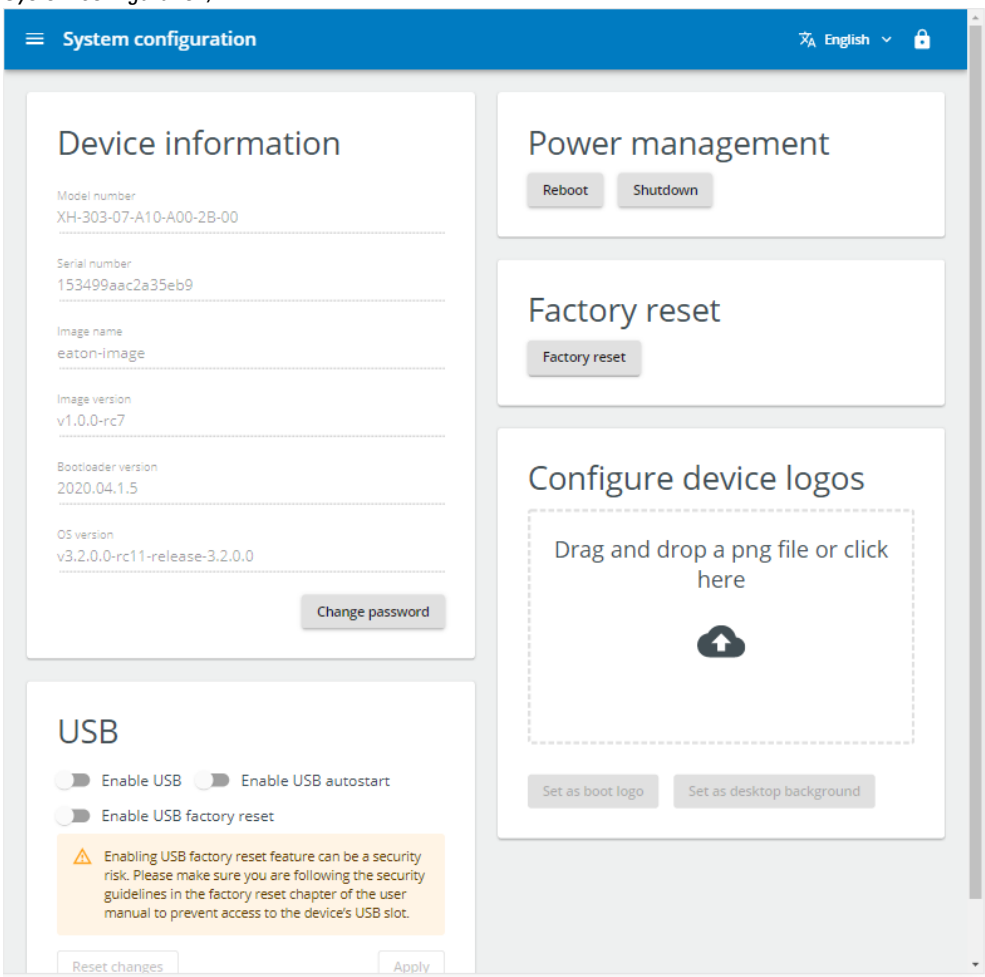

Fig. 17: Device example

6.3.1.1 Device information

Device information will show the model number, serial number and other information regarding the device, as well as the versions of all installed software.

You can change the password for the web configuration here by tapping the "Change password" button.

6.3.1.2 Power management

You can reboot and shut down the device under Power management.
In order to prevent the device from being shut down or rebooted by accident, the device will show a security prompt asking for confirmation first.

6.3.1.3 Factory reset

You can reset the device to its default settings under Factory reset.

After confirming the prompt, all the settings and passwords in the XH-303 will be reset back to factory settings.

6.3.1.4 USB

You can enable and disable the USB subsystem and the USB autostart function under USB.

→ If USB autostart is enabled, the system will search for shell scripts named 'etn-startup.sh' in the root directory of the partitions in a plugged-in USB drive and run them with a GNU Bash interpreter.

6.3.1.5 Configure device logos

You can change the logo that will be shown when booting up under Configure device logos.
In addition, there is also the option of changing the start screen shown when the device has booted up but no applications are running yet.

You can simply drag & drop a PNG image file directly. Please make sure to observe the limits for the image size and resolution.

6.3.2 Network menu

System configuration/

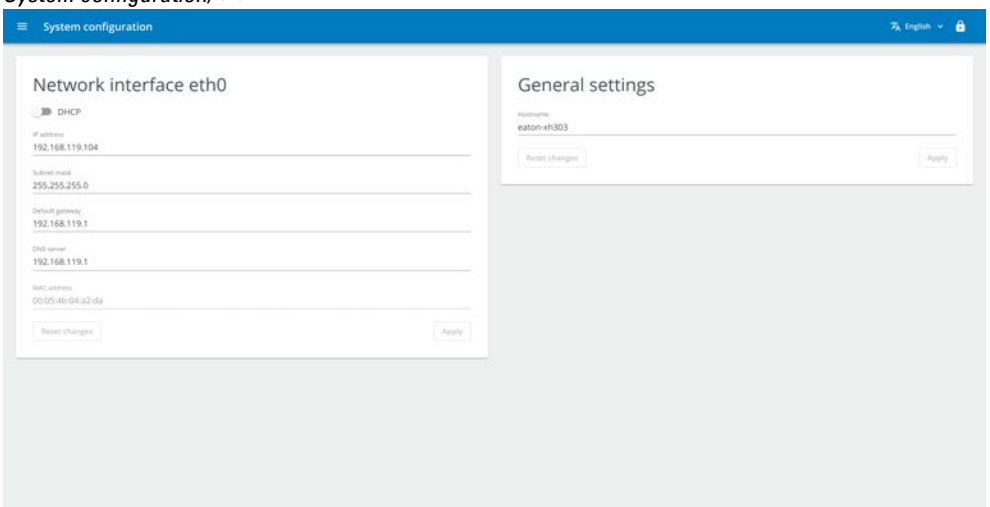

Fig. 18: Network example

6.3.2.1 Network Interface

The number of Network Interface entries that you can use to set up the IP configuration for the various network interfaces will depend on the specific number of interfaces the device has.

You will probably be disconnected from the Web Config Tool after making changes to the network configuration. To apply them with the new IP address, log in to the Web Config Tool again.

Devices are shipped with the IP address: 192.168.119.104.

6.3.2.2 DHCP

If the DHCP client is enabled, the device will automatically request a configuration from the network.

If DHCP is disabled instead, you will need to enter a static network configuration with an IP address, subnet mask, default gateway and DNS server.

Devices are shipped with DHCP functionality disabled.

6.3.2.3 General settings

You can change the host name under General settings. This name will be used for specific multicast DNS services.

6.3.3 Screen menu

You can adjust the brightness and dimming for the display, as well as whether it will be turned off automatically, under Screen .

System configuration/

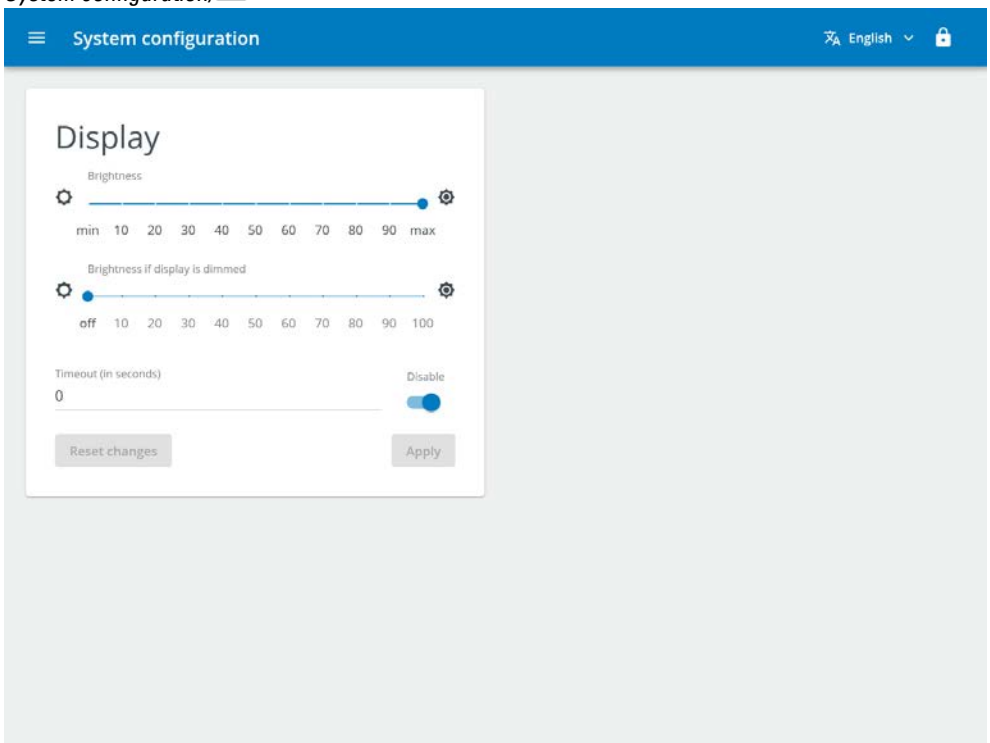

Fig. 19: Screen

You can use the slider at the top to adjust the display brightness during use.

6.3.3.1 Timeout (in seconds)

Can be used to enter a time after which the display will be dimmed or turned off. After this time elapses, the brightness will be dimmed to the value set with the second slider
(with the default display configuration, it will be dimmed to 50% after 30 seconds). The set time will restart the moment the display is touched.

6.3.4 Update menu

System configuration/

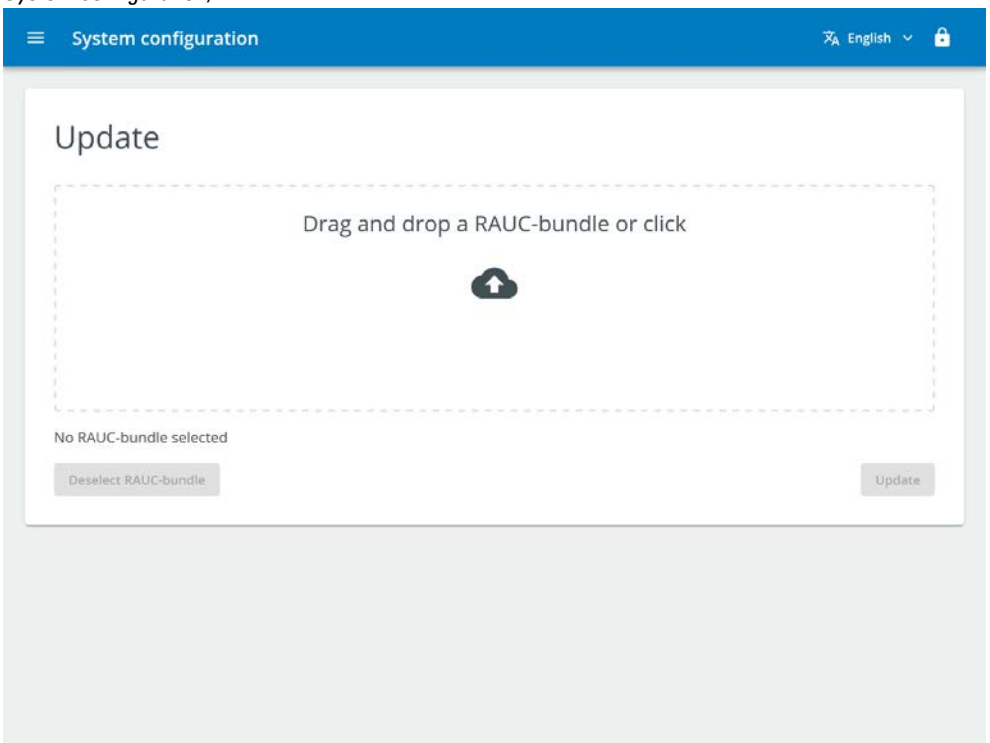

Fig. 20: Update

You can upload a RAUC bundle under Update in order to update the device.

You can simply drag & drop the *.raucb file you want to use.

→ Do not turn off or unplug the device during the update!

No RAUC-Bundle selected

If you have already uploaded a RAUC bundle, the name of the bundle will be shown here.

After selecting the package and tapping the "Update" button, it is important for you to remain on the page until the upload is completed. You can follow the corresponding progress on the first progress bar, as shown below.

Progress display

As soon as the update finishes uploading, the progress bar for the installation process will appear.

System configuration,

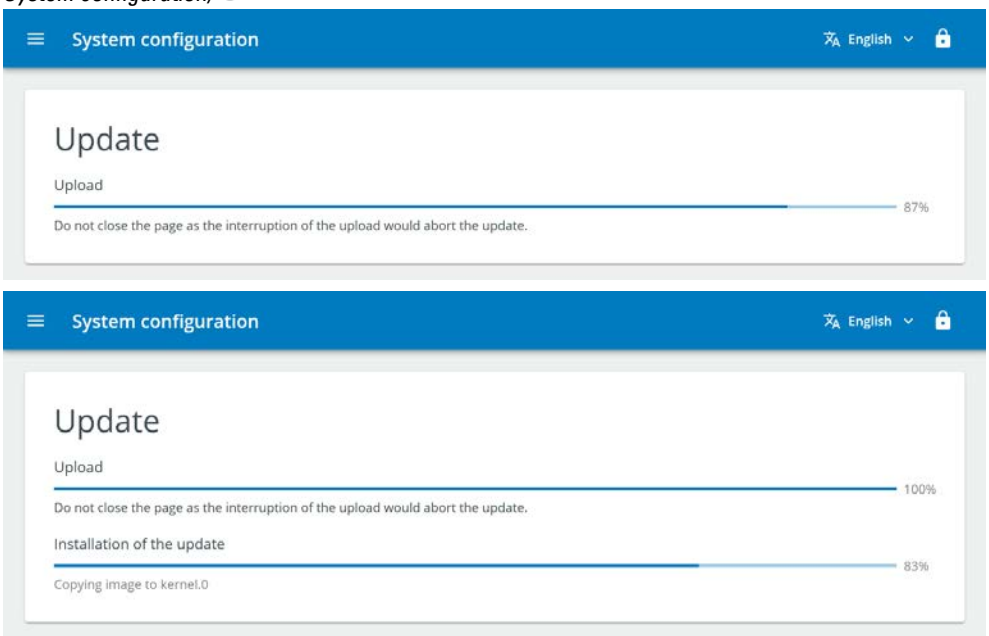

Fig. 21: Update progress bar

You will need to restart the device once the update is done.

▶ To do this, tap the Restart button shown after the update is completed.

Please note that you can only carry out one update after each restart.

6.3.5 Date & Time menu

System configuration/

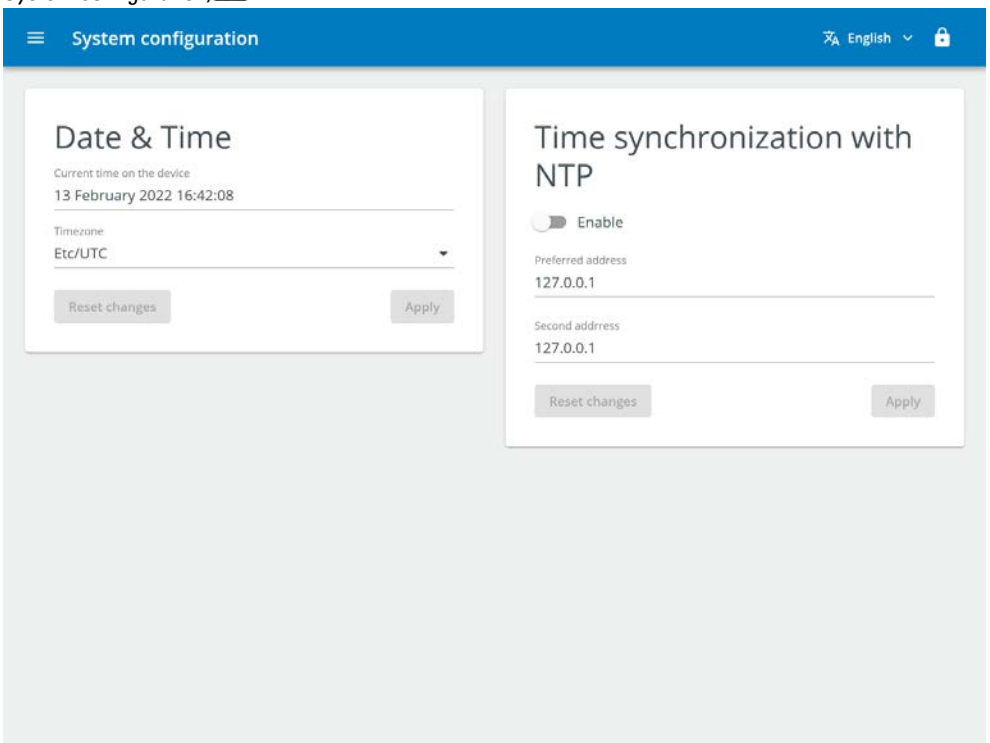

Fig. 22: Date & Time

6.3.5.1 Date & Time

The time currently set up for the device is shown under Date & Time.

You can change the date and time (including the seconds) here.

The device will always save the UTC time (formerly known as Greenwich Mean Time) as its system time. The relevant time zone adjustment, if any, will then be made before displaying the time.

If you use NTP time synchronization, it is important to set the right time zone, since the time received will be the UTC time.

6.3.5.2 Time synchronization with NTP

In the Time synchronization with NTP pane, you can enable NTP and select a preferred address and a backup address. The NTP service will then be used to correct the time and the system time on a regular basis.

6.3.6 Remote access menu

System configuration/

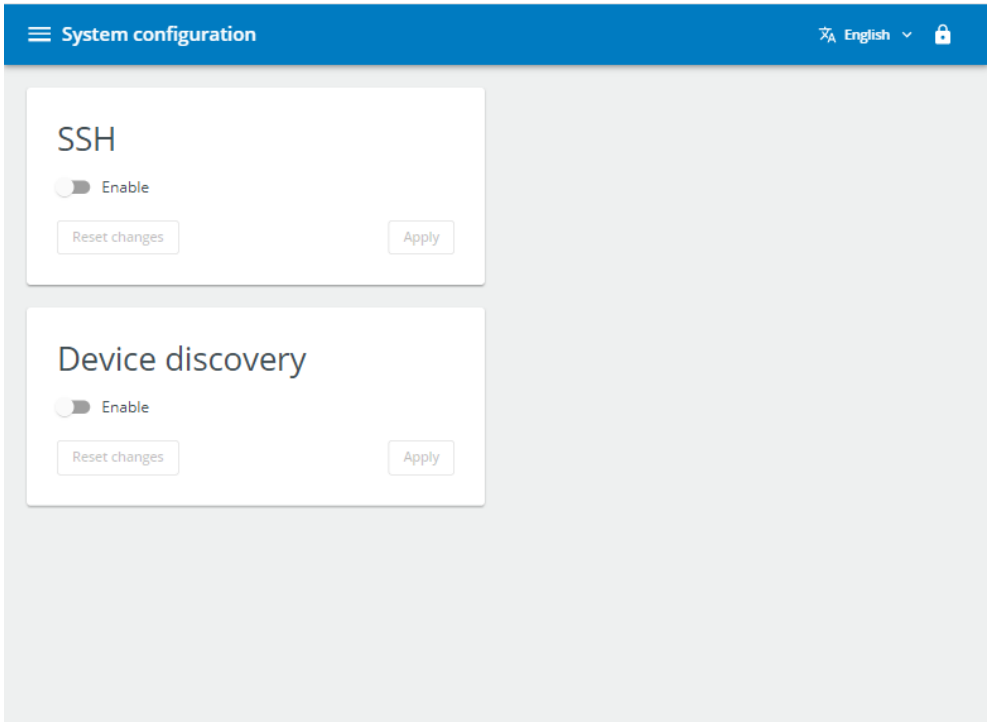

Fig. 23: Remote access

6.3.6.1 SSH

You can enable and disable the SSH service in the SSH pane.
Please note that as of this writing, the SSH service can only be used by Eaton personnel for servicing purposes.

→ Make sure to disable SSH after you no longer need it and the device is in a production environment. This will disable remote access and improve the device's security.

6.3.6.2 Device Discovery

→ Implemented on OS / firmware version 3.4.0.0 and higher.

Currently not available.

6.3.7 Browser menu

System configuration/ HTTP

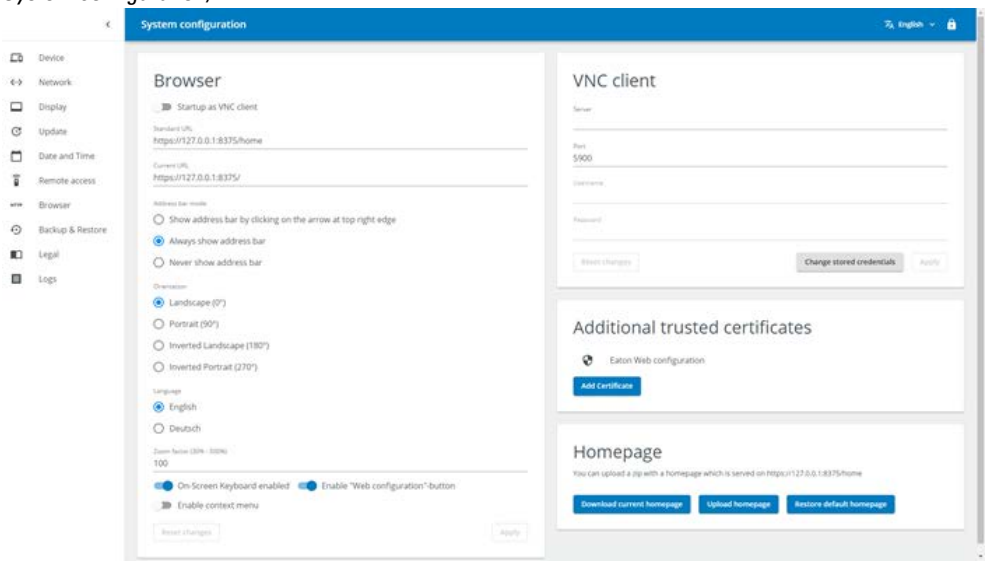

Fig. 24: Browser

6.3.7.1 Browser

Under Browser, the default URL is set. The "current URL" shows the current address. Changes to these settings will be applied as soon as you tap the "Apply" button.

You can use the Address bar mode settings to always hide or show the address bar or only show it when the button in the top right corner is tapped.

You can set the display mode to landscape or portrait mode under Orientation and also have the option of rotating those two so that you can use the device upside down if this will make its connectors more accessible.

You can select either English or German as the language for the context menu under Language.

The zoom factor is applied when the browser starts and can be used to adjust static web applications as necessary for the device's display. You can also disable the context menu if it is not needed for your web application, as well as disable the "Web configuration" button in the navigation bar.

6.3.7.2 VNC client

If “Startup as VNC client” is switched on, not the “Standard URL” will be opened in the browser after startup but a connection to a VNC server will be established by the VNC client.

System configuration HTTP

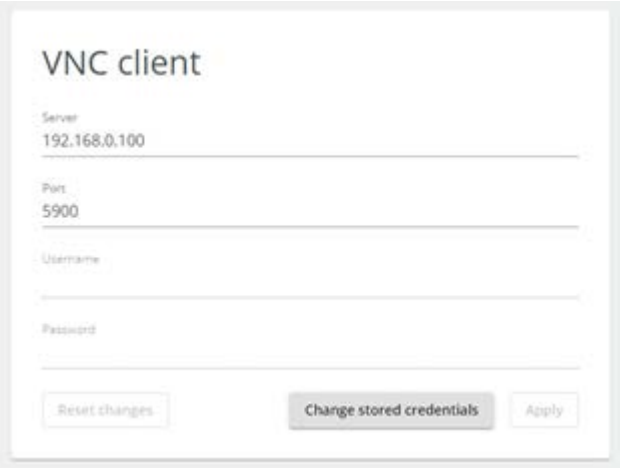

Fig. 25: VNC client

An IP address or a DNS name of a VNC server can be specified as the server.

The VNC port 5900 is selected by default. This can be changed if the VNC server is to be reached on a different TCP port.

If a username and/or password is required for the connection, these can be defined and securely stored using the Change stored credentials button.

When a VNC connection is selected, for example the URL "vnc://192.168.0.100:5900" will be displayed as the URL in the browser address bar. Please note that the URL prefix "vnc://" is not a standardized notation and is only valid on the device.

VNC - Virtual Network Computing
VNC can be used to control computers remotely. VNC server is usually available on Eaton panels. Older legacy Windows CE devices can also be remotely controlled with the VNC client. Devices from other manufacturers often use the open VNC protocol as well. These can thus be easily integrated into the operation with the web panel.
Further information on VNC on to be find on Wikipedia.

Differences between HTML/HTTP and VNC

While HTML is a page description language that is sent from the web server to the browser via the Hyper Text Transfer Protocol (HTTP) and the individual HTML elements are drawn (rendered) there, the VNC protocol renders the screen content one-to-one as an image (bitmap) of the VNC server which is then sent to the client and displayed there. The transmission is optimized to such an extent that only changes are transmitted. It can therefore be used, as HTTP, over slower network connections.

Inputs from the user of the VNC client are sent to the VNC server as mouse and keyboard events and are then passed on to the operating system on the server side as emulated inputs for processing.

With HTML on the other hand, user inputs are evaluated locally with Javascript on the client side in the browser and, if necessary, further requests will be triggered via HTTP to a web server or an application server (e.g. via REST API or WebSocket).

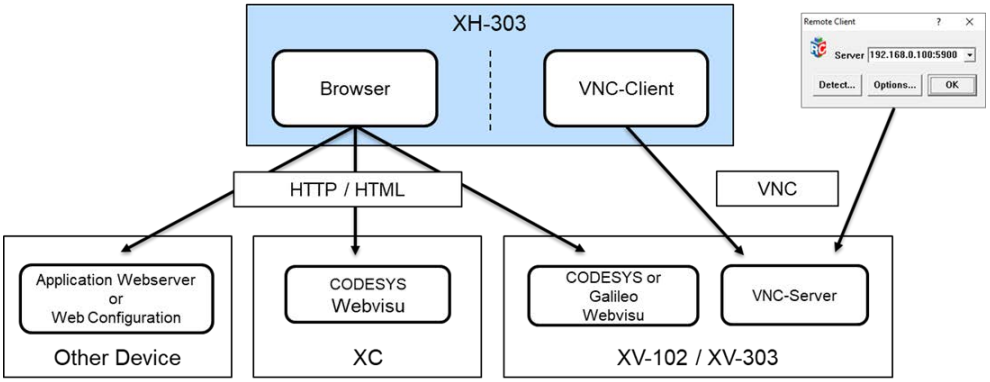

Fig. 26: HTML versus VNC

XC devices do not have a VNC server because these devices do not have a local display whose content could be shown in the VNC client.

6.3.7.3 Additional trusted certificates

In the "Additional trusted certificates" pane, you can add certificates that the browser should trust. A web server will only be trusted if the Common Name (domain/host) and the certificate match the certificate provided by the web server. Please note that you will need to restart the device in order to use new certificates.

6.3.7.4 Homepage

You can change the landing page (start page) for the local browser under Homepage. In addition, you can use any static web resources, i.e., HTML, JavaScript, CSS, images, fonts and everything that can be retrieved and processed with JavaScript. To do this, the web resources must be added to a ZIP archive and the archive must be uploaded with the "Upload homepage" button. The ZIP archive will then be delivered statically one-to-one to `https://127.0.0.1:8375/home` (URL). To set it up as the landing page, you will need to set this URL as the default URL on the browser page. (For more information on how to create your own landing page, please refer to: → Section "Custom homepages", page 68

6.3.8 Legal menu

Legal lists the open-source licenses used.

System configuration/

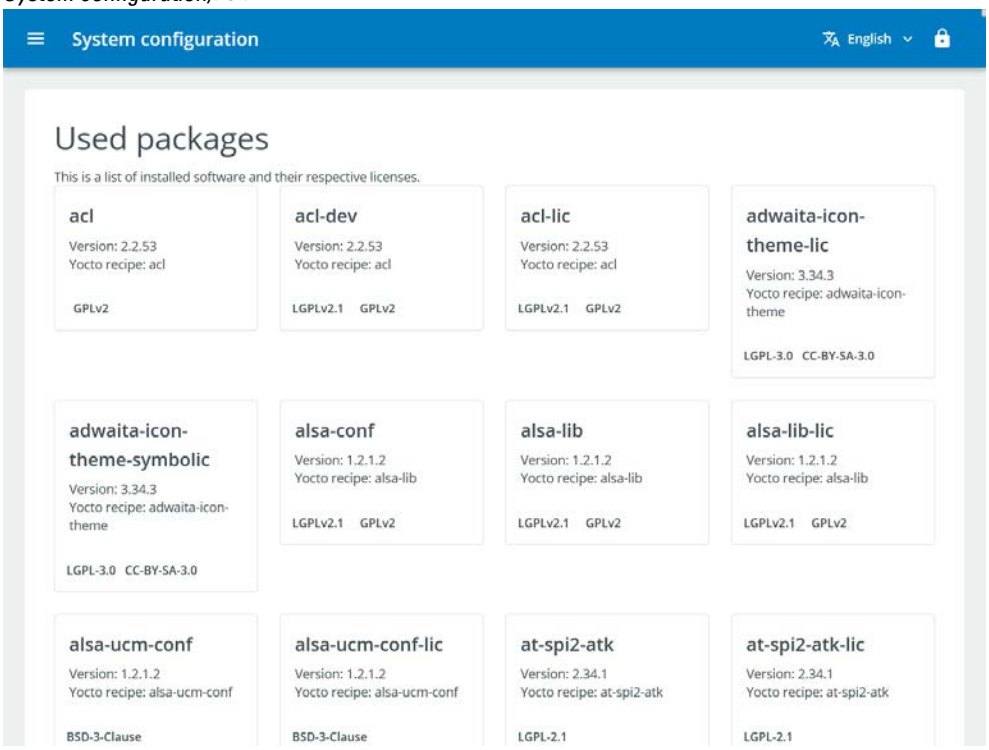

Fig. 27: Legal

All packages delivered with the running image will be shown together with their version and licenses.

6.3.9 Logs menu

You can download various logs generated on the device under Logs.

System configuration/

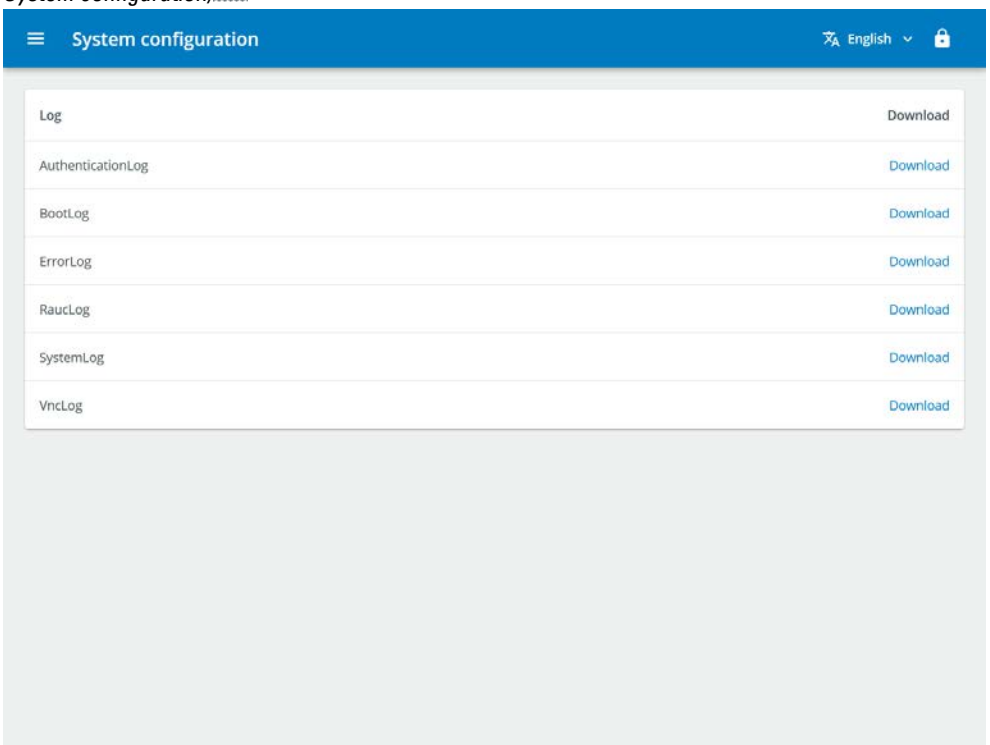

Fig. 28: Logs

To download one of the files, select it and then double-click on the "Download" button.

6.4 Custom homepages

In addition to the default landing page, users have the option of setting up their own start page on the web panel. This feature makes it easy to use multiple device webpages from a single web panel. The page can be accessed at:

`https://{deviceIPAddressOrURL}:8375/home/`

Assumption:

Address for Web Config Tool: => `https://{deviceIPAddressOrURL}:8375`

{deviceIPAddressOrURL}	This should be the IP address set in the network configuration. If this IP address is resolved with a DNS server, it is also possible to access the device landing page with the DNS URL instead.

Example: Local access on the web panel with https://127.0.0.1:8375/home/

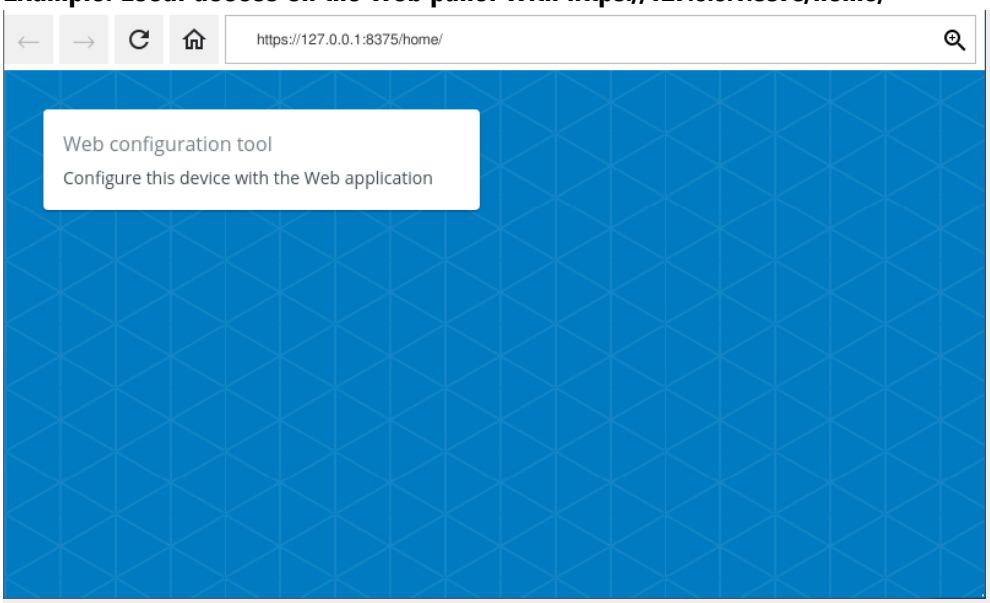

Fig. 29: Default landing page

This is the sample homepage provided by default.

6.4.1 Changing the link tiles on the default homepage

Follow the steps below:

1. Download the current page to make changes to it
2. Configure the link list in the `links.txt` text file or create your own homepage
3. Upload the modified page back onto the device

To be able to modify the default landing page, you will first need to download the current landing page from the web panel onto your PC.

▶ To do this, go to the System configuration (setup page) on your browser and click on the Download current homepage button under Homepage.

System configuration

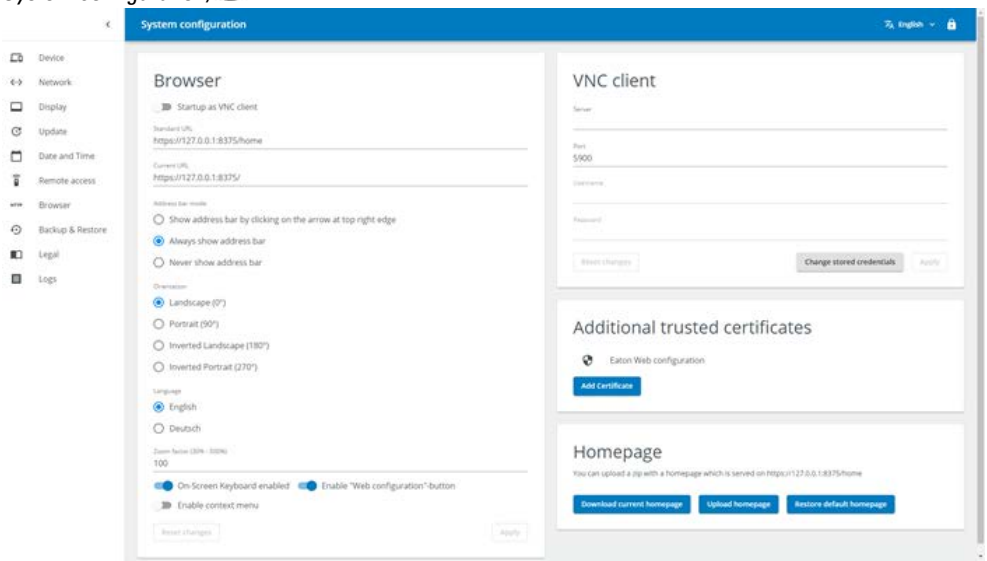

Fig. 30: Browser

Store the ZIP file locally and extract it (e.g., with 7-Zip, which is available for free).

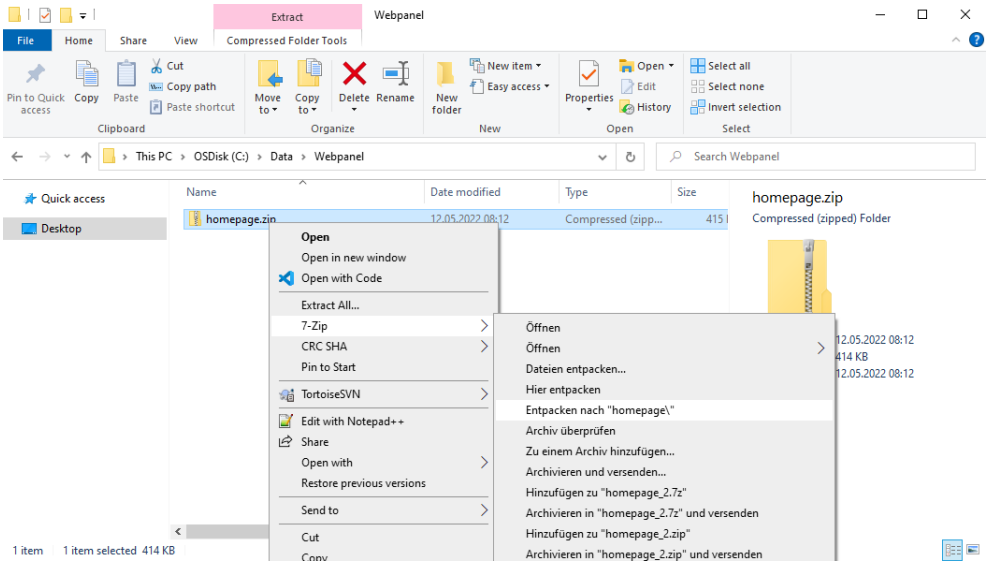

Fig. 31: Locally storing and extracting the ZIP file

The easiest way to modify the homepage is to edit the `links.txt` text file in the unzipped `\homepage\home\` subfolder.

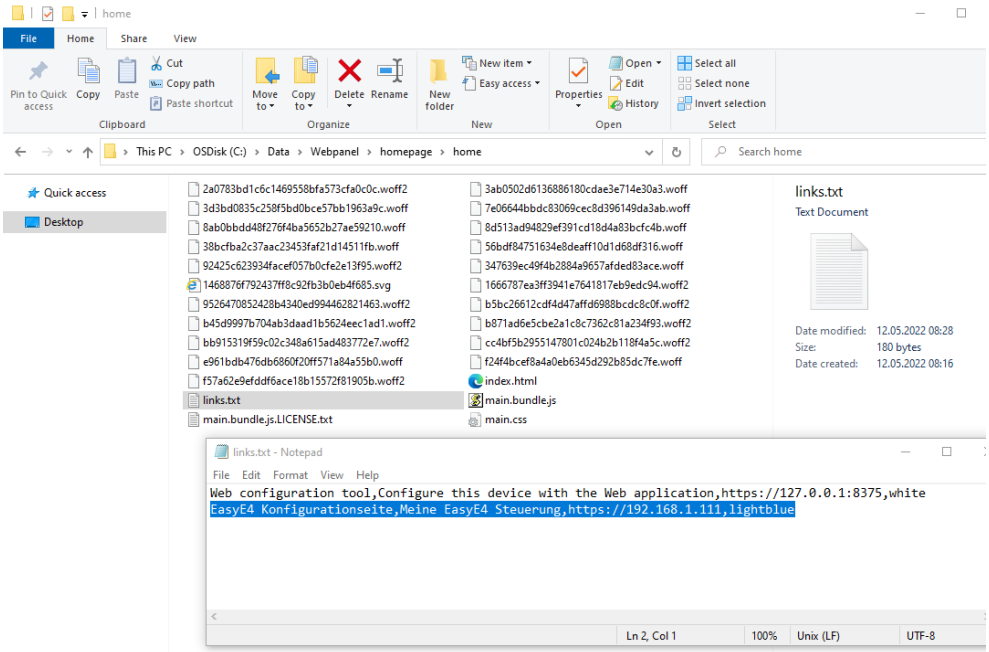

Fig. 32: Configuring the `links.txt` text file

Each row in the file corresponds to a link tile. The format follows the following syntax:

`{LinkName},{LinkDescription},{LinkURL},{Backgroundcolor}`

{LinkName}	Link name
{LinkDescription}	Additional description of link
{LinkURL}	URL of the link that should be opened
{Backgroundcolor}	Tile background color You can use HTML colors for the background color: https://www.w3schools.com/colors/colors_names.asp

Sample entry:

```
EasyE4 configuration page, Meine EasyE4 Steuerung,
https://192.168.1.111, lightblue
```

After making the changes you want, use 7-Zip to zip the **home** folder into a new ZIP file.

Please note:
Make sure to only edit the "links.txt" file and to leave all the other files unchanged.

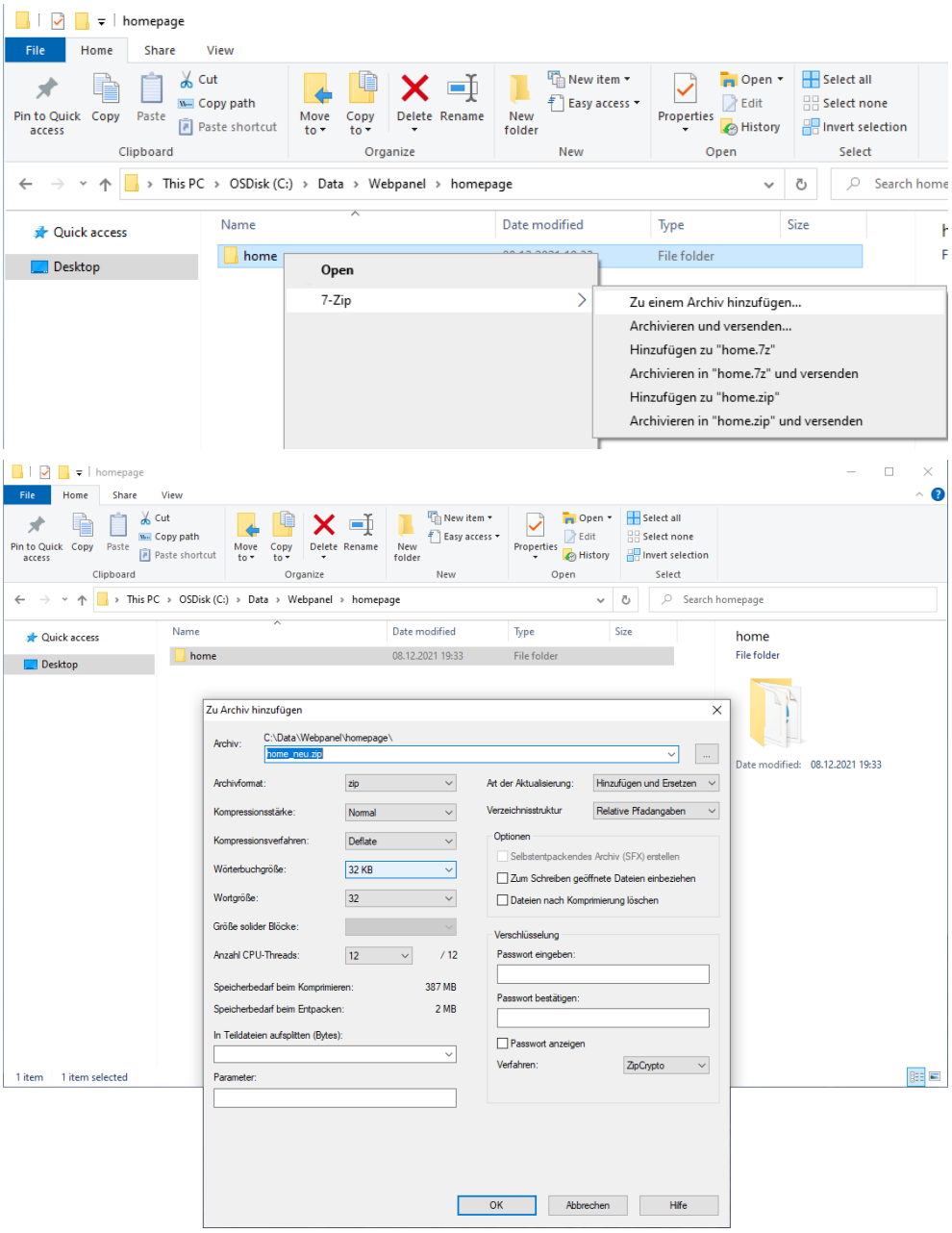

Fig. 33: Updating the *zip file

Click on the Upload homepage button to load the modified page, as a ZIP file, onto the web panel.

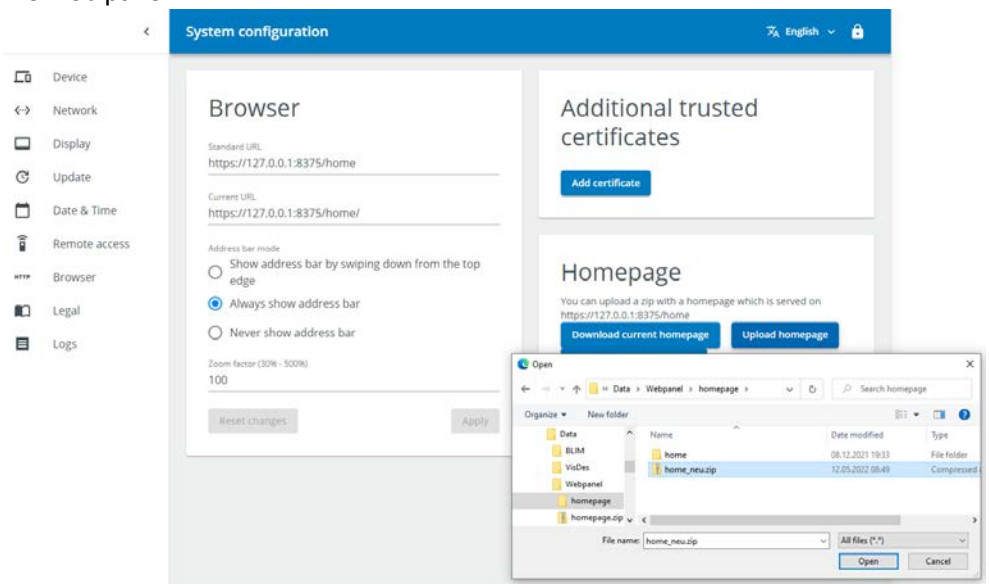

Fig. 34: Uploading the ZIP file

The change will not be available:

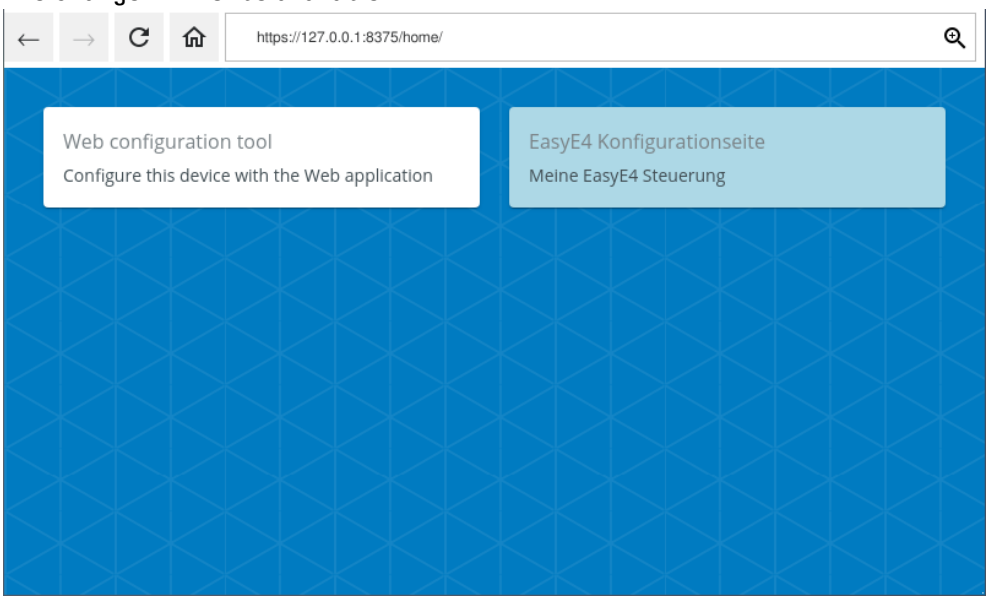

Fig. 35: Example showing a change to the `links.txt` text file in the browser

6.4.2 Activating a custom landing page

In addition to the option of making changes with the `links.txt` text file, you can also activate a completely custom start page instead.
This custom landing page needs to be named "**index.html**".
In addition, it must be stored, together with all additional HTML pages, images, JavaScripts, CSS styles, etc., in a **home** folder, after which the folder must be compressed into a ZIP file.
Finally, this ZIP file must be uploaded onto the web panel as described in section → Section " Changing the link tiles on the default homepage", page 69.

6.4.3 Resetting the homepage to the default page

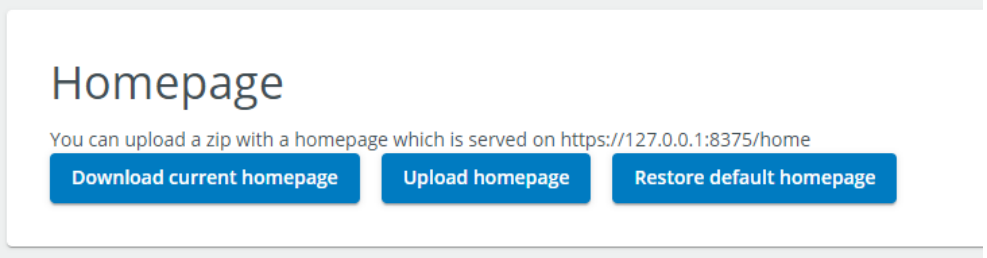

Fig. 36: Reset

You can restore the original landing page at any time by tapping Restore default homepage.

7. Make Connection

The following section is intended for users that have basic networking skills.

To explain how to use the XH-303 with a web server, the Eaton easyE4 is used as an example below (the programmable easyE4 controller features an integrated web server).

7.1 easyE4 as Webserver

The XH-303 and the easyE4 device are connected using the default address.

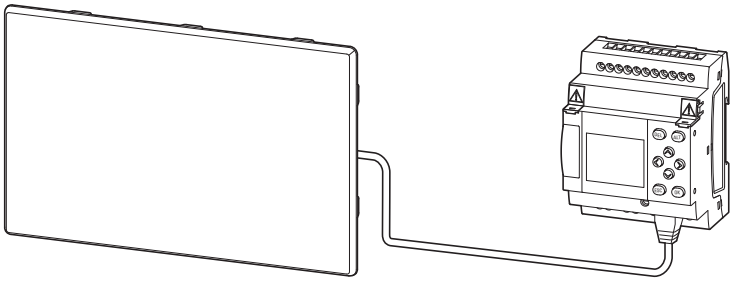

Fig. 37: Ethernet connection using the ports on the XH-303 and easyE4

The easy Remote Touch Display manual provides information on how to configure the easyE4, the required settings, setting passwords and enabling the web server function.

Manual easy Remote Touch display MN048027

easyE4 sample configuration

IP Address:	Static
DHCP:	Disabled
IP Address:	192.168.0.20
Screen:	255.255.255.0

Matching settings on XH-303

IP Address:	Static
DHCP:	Disabled
IP Address:	192.168.0.21
Screen:	255.255.255.0
Web server URL address (easyE4):	https://192.168.0.20

7.2 Using the Web Config Tool

Direct connection between the easyE4 and the XH-303 HMI Web Panel

If the Ethernet connection is routed out of the building at one point, a network isolator (switch) must be used without fail for the connection to the XH-303.

Prerequisites

- One standard RJ45 Ethernet cable (not included)
- Existing separate power supply for:
  - easyE4
  - XH-303

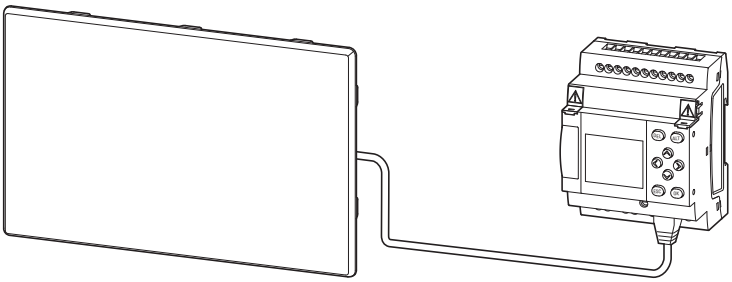

Fig. 38: Ethernet connection using the ports on the XH-303 and easyE4

easyE4 connection with the XH-303 through an Ethernet switch

If you want to connect more than one easyE4 base device or more than one network station to the XH-303, a properly sized Ethernet switch must be placed in between.

Prerequisites

- Standard Ethernet switch with at least two ports (not included)
- Two standard RJ45 Ethernet cables (not included)
- Existing separate power supply for:
  - easyE4
  - XH-303
  - Ethernet-Switch

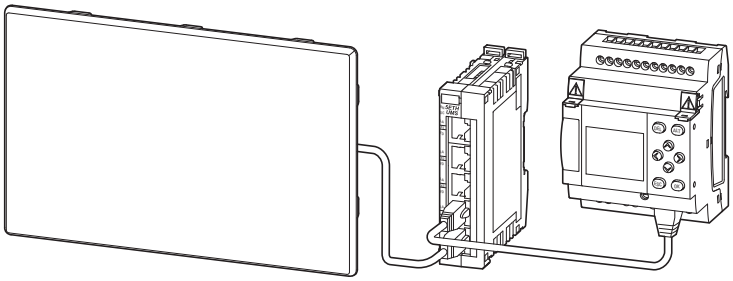

Fig. 39: Ethernet connection between the XH-303 and easyE4 devices through an Ethernet switch

7.3 Start Web Config Tool

easyE4 connection with the XH-303

To configure or program applications, you can use a PC with a web browser as a configuration tool.

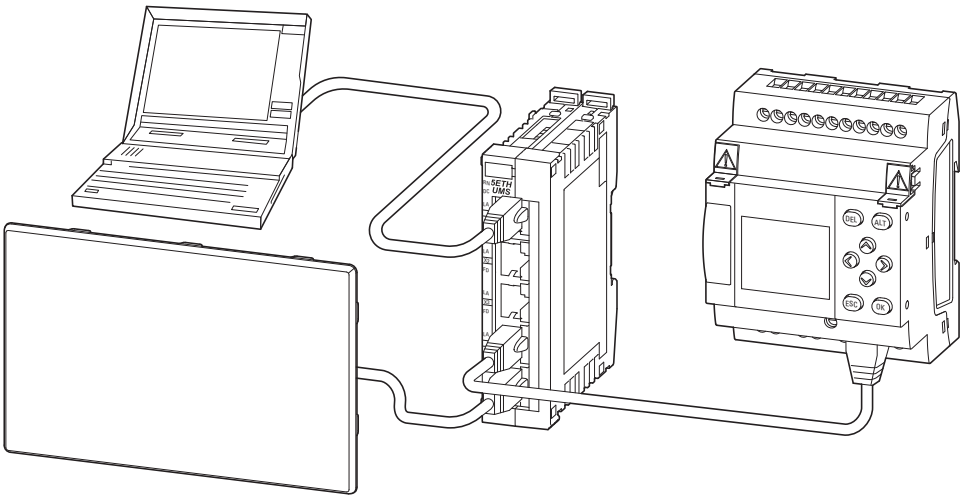

Fig. 40: Ethernet connection between the XH-303 and easyE4 devices through a switch with the help of an external web browser (PC)

7.3.1 Steps for establishing a connection

1. Establish a physical connection between the easyE4 and the XH-303 with an Ethernet cable with RJ45 connectors.
2. Power the devices.

7.3.1.1 easyE4 found

The XH-303 shows the easyE4's integrated web server menu

Browser on XH-303XH-303

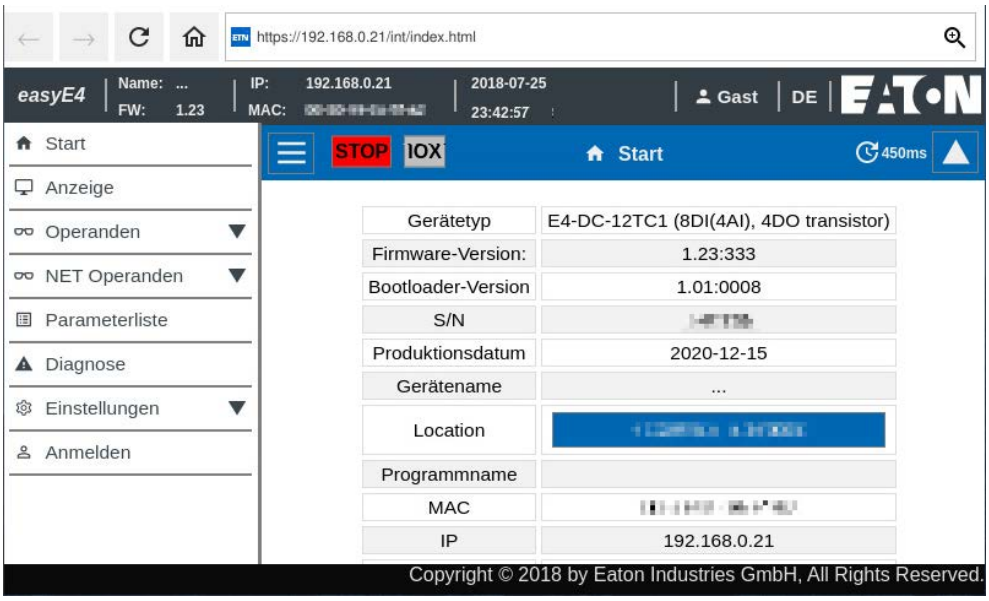

7.3.1.2 easyE4 not found.

Browser on XH-303XH-303

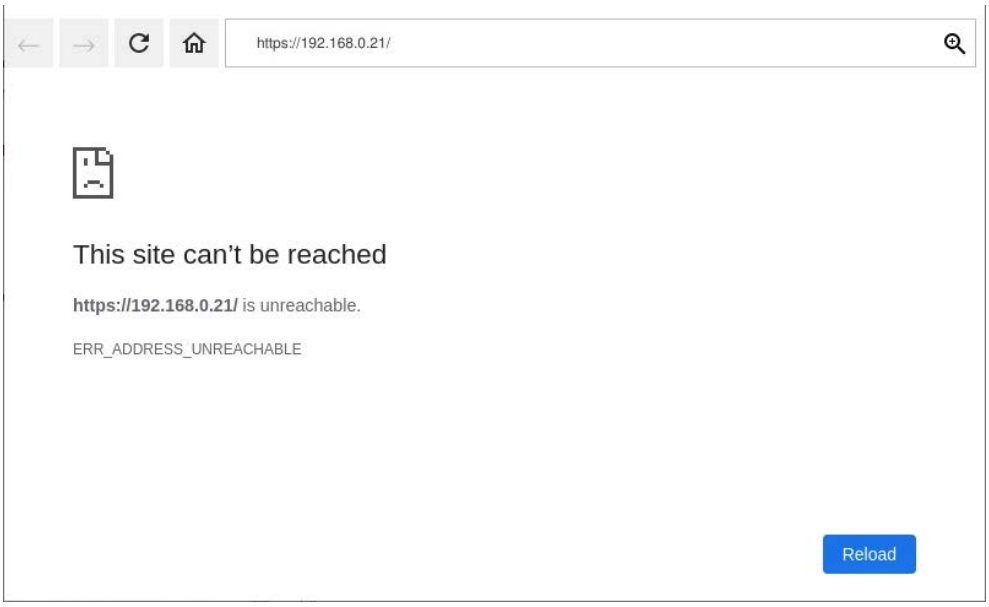

The XH-303 indicates that the easyE4 web server could not be found.

One possible reason for this could be the settings on the XH-303 web panel. In this case, you would follow the steps below:

▶ Press the CTRL button to start the webconfig.

After entering the password, you can view and change the set IP address in the Network menu, → Section " Network menu", page 57.

→ The IP addresses for the XH-303 and the easyE4 must be on the same subnet and the subnet mask must be the same.

8. Faults

This section provides troubleshooting information for your XH-303 in case it does not behave as expected.

Fault	Cause	Remedy
XH-303 will not boot up	No 24 VDC supply voltage	Check the input wiring. Switch on XH-303.
The display stays or turns dark.	The backlight is deactivated.	Turn on the backlight; please refer to → Chapter "8 Web Config Tool", page 51
The capacitive multitouch is not responding or is responding incorrectly when used.	The functional earthing has not been connected properly.	The XH-303 needs to be connected to the conductive structure in, e.g., the control panel using the central earth point (earthing screw). Ground connection characteristics: Wire cross-sectional area ≧ 1.5 mm², length ≦ 350 mm
	The touch is not calibrated correctly.	Switch on XH-303. Calibrate the touch functionality; please refer to the system description Linux platform from EATON for operating system/web browser and configuration
	The touch is disabled.	Switch on XH-303. Enable the touch functionality; please refer to the Linux platform from EATON for operating system/web browser and configuration system description

9. Maintenance

9.1 Cleaning and maintenance

The XH-303 are maintenance-free.
However, the following work may need to be carried out:

- Cleaning the capacitive multitouch when soiled.
- Recalibrating the capacitive multitouch if it stops responding correctly to touch.

9.1.1 capacitive multitouch

When soiled:

CAUTION
POINTY, SHARP OBJECTS AND CORROSIVE LIQUIDS
When cleaning the XH-303:

- Do not use any pointy or sharp objects (e.g., knives).
- Do not use aggressive or abrasive cleaning products or solvents.

Make sure that no liquids get into the XH-303 unit (short-circuit hazard) and that the XH-303 unit is not damaged in any way.

▶ Clean the capacitive multitouch with a clean, soft, damp cloth.

9.2 Repairs

For repairs, please contact your vendor or Eaton's Technical Support.

CAUTION
DESTRUCTION
The XH-303 should only be opened by the manufacturer or by an authorized center. Operate the XH-303 until only with the enclosure fully closed and sealed.

Use the original packaging to ship the device.

9.3 Storage, transport and disposal

9.3.1 Storage and transport

CAUTION
UV LIGHT
Plastics will become brittle when exposed to UV light. This artificial aging will reduce the XH-303 unit's lifespan. Protect the XH-303 unit from direct sunlight and other sources of UV radiation.

CAUTION
SHORT-CIRCUIT HAZARD
If the XH-303 Web Panel is or has been exposed to environmental fluctuations (ambient temperature, air humidity), condensation may form on or inside XH-303. As long as this condensation is present, there will be a short-circuit hazard.
Do not switch on the XH-303 Web Panel when it has condensation in or on it.
If the XH-303 Web Panel has condensation in or on it, or if the panel has been exposed to environmental fluctuations, let the XH-303 settle into the existing ambient temperature before switching it on. Do not expose the XH-303 Web Panel to direct thermal radiation from heating appliances.

The ambient conditions must be met when transporting and storing the XH-303.

The ambient air temperature for storage and transportation must not exceed the maximum specified limit:

Ambient climatic conditions	
Air pressure (in operation)	795 - 1080 hPa
	Max. 2000 m above sea level
Temperature	
Operation	ϑ: ± 0 – +50 °C (+32 – +122 °F)
Mounting position	XH-303-70-A10-A00-2B, XH-303-10-A10-A00-2B α ≦ ± 45°, T ≦ 50 °C (122 °F) XH-303-15-A10-A00-2B α ≦ ± 10°, T ≦ 50 °C (122 °F) α ≦ ± 45°, T ≦ 45 °C (113 °F) Inclination from vertical: α ≦ ± 45° at operating temperature ≦ 45°C (113°F) possible (if using natural convection)

Ambient climatic conditions	
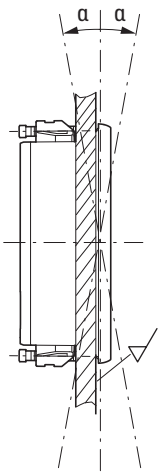	
Storage / Transport	ϑ: -20 – + 60 °C (-4 – +140 °F)
Humidity	Relative humidity 10 - 95 %
Condensation	Non-condensing

Before commissioning
If storing/transporting the device in cold weather conditions or in such a way that it will be exposed to extreme differences in temperature, make sure that no condensation forms on or inside the device.
If there is condensation in or on the device, do not switch on the XH-303 HMI Web Panel until it is completely dry.

Use the original packaging to ship the device.

The XH-303 is sturdily built, but the components inside it are sensitive to excessively strong vibrations and/or mechanical shock.

Accordingly, make sure to protect the XH-303 from mechanical loads that exceed the scope of the unit's intended use.

The XH-303 should only be transported in its original packaging after being packed properly.

9.3.2 Disposal

Important!
Dispose of recyclables as required by your local recycling regulations.

XH-303 no longer being used must be professionally disposed of as per local standards or returned to the manufacturer or relevant sales department.

Tab. 6: Materials used XH-303

Assembly part		Material
Display	XH-303	hardened glass in plastic frame
Enclosure material		Insulated material black

Materials used in the packaging

Packaging	Material
Outer packaging	Cardboard
Inner packaging	Cardboard Plastic bag: Polyethylene (PE)

Appendix

A.1 Technical data 86
A.1.1 Data sheets 86
A.1.2 Dimension and weight specifications 86
A.1.3 General data 89
A.1.4 Port and interface specifications 91
A.1.5 Information on the power supply 92
A.1.6 Approvals and declarations 93
A.2 Further usage information 94

A.1 Technical data

A.1.1 Data sheets

The current specifications for the device can be found in the corresponding data sheet at Eaton.com/ecat

A.1.2 Dimension and weight specifications

XH-303-70-A10-A00-2B

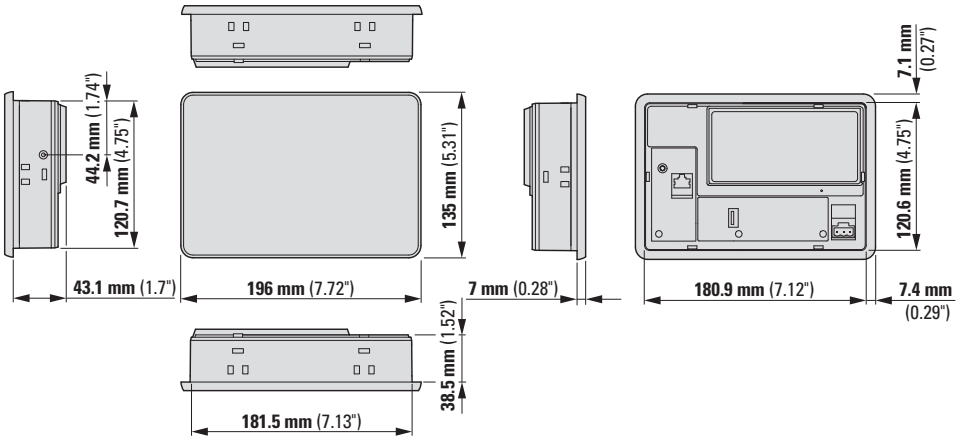

Fig. 41: Dimensions for 7.0" front mounting devices in mm (inches)

Width x Height x Depth (without plug)	196 mm x 135 mm x 51 mm (7.72" x 5.31" x 2.01")
Weight	0.7 kg (1.63 lbs)

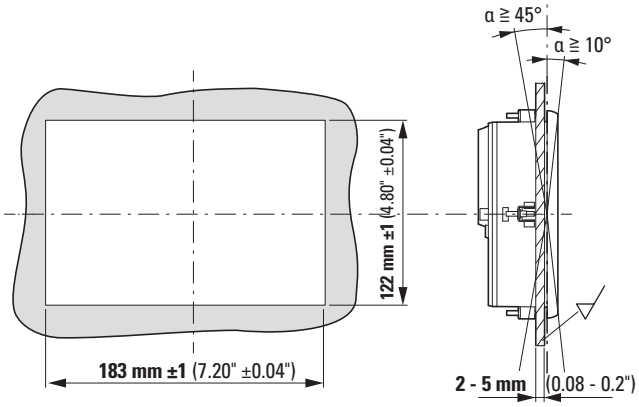

Fig. 42: Mounting cutout for 7.0" front mounting devices in mm (inches)

XH-303-10-A10-A00-2B Front mounting 10.1" display

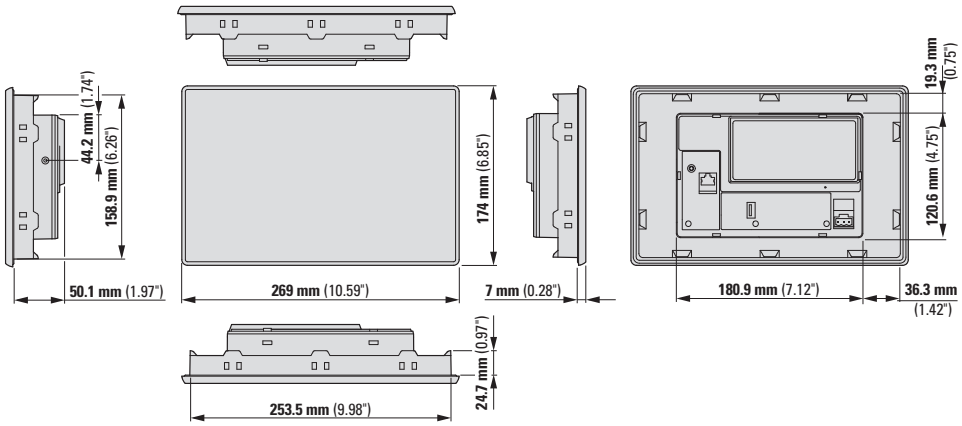

Fig. 43: Dimensions for 10.1" front mounting devices in mm (inches)

Width x Height x Depth (without plug)	269 mm x 174 mm x 58 mm (10.59" x 6.85" x 2.28")
Weight	1.0 kg (2.49 lbs)

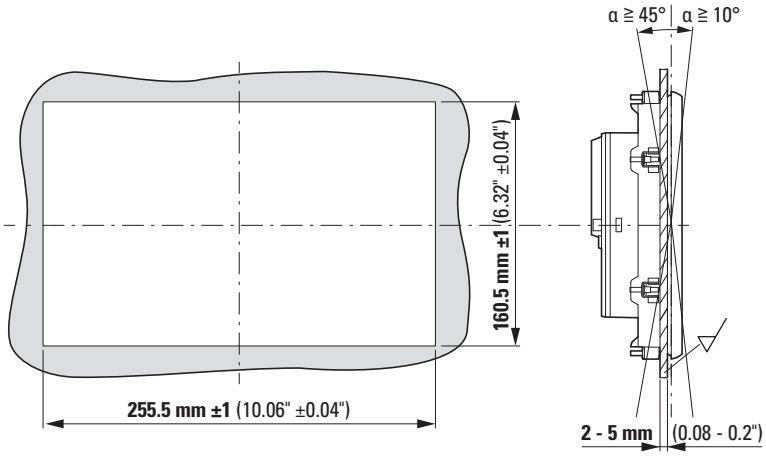

Fig. 44: Mounting cutout for 10.1" front mounting devices in mm (inches)

XH-303-15-A10-A00-2B Front mounting

15.6" display

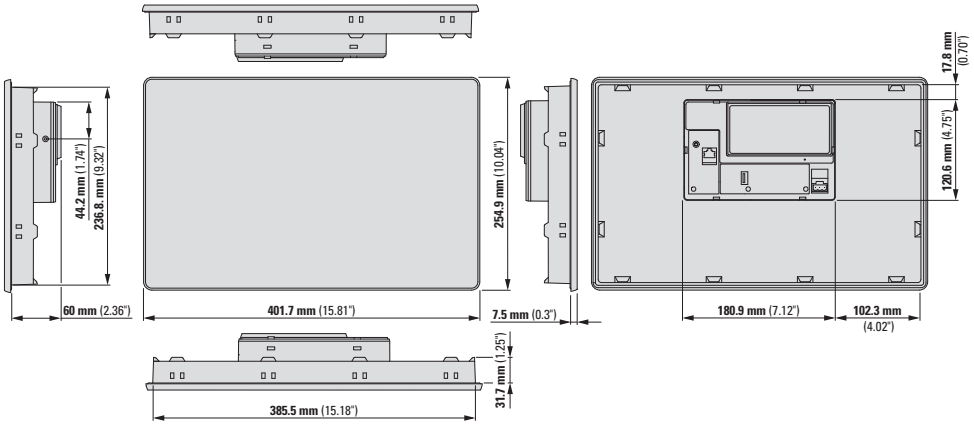

Fig. 45: Dimensions for 15.6" front mounting devices in mm (inches)

Width x Height x Depth (without plug)	403 mm x 255 mm x 77 mm ± 0.2 (15.9" x 10.04" x 2.661" ±0.008)
Weight	3.1 kg (7.17 lbs)

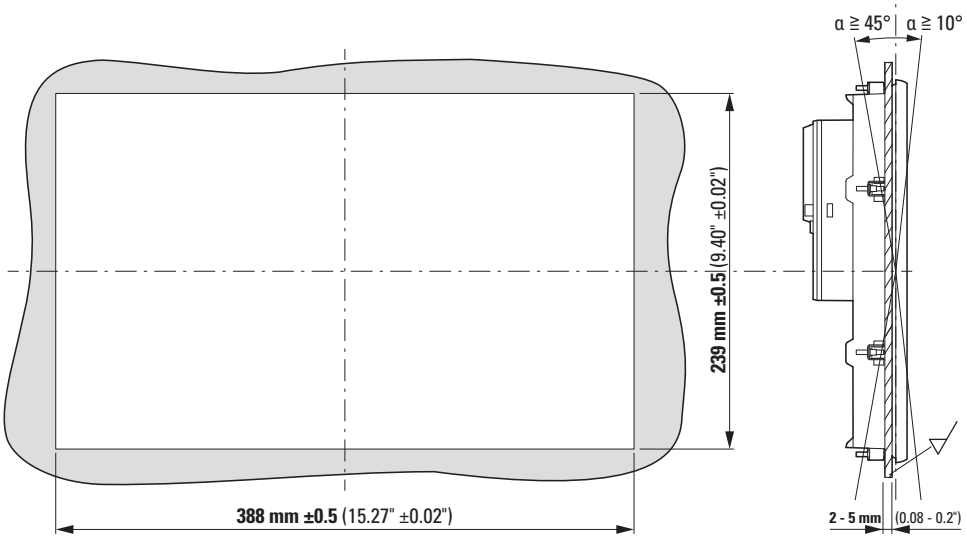

Fig. 46: Mounting cutout for 15.6" front mounting devices in mm (inches)

A.1.3 General data

The following specifications apply to all XH-303 units or to the specified part nos. where applicable.

General	
Material	Plastic enclosure and hardened glass in plastic frame
Degree of protection	IP65 (at front), IP20 (at rear)
Cooling	Fanless CPU and system cooling, natural convection-based passive cooling

Operation	
Technology	Capacitive Touch
Touchsensor	Multitouch (Multifinger Touchscreen)

Ambient climatic conditions	
Air pressure (in operation)	795 - 1080 hPa
	Max. 2000 m above sea level
Temperature	
Operation	ϑ: ± 0 – +50 °C (+32 – +122 °F)
Mounting position	XH-303-70-A10-A00-2B, XH-303-10-A10-A00-2B α ≦ ± 45°, T ≦ 50 °C (122 °F) XH-303-15-A10-A00-2B α ≦ ± 10°, T ≦ 50 °C (122 °F) α ≦ ± 45°, T ≦ 45 °C (113 °F) Inclination from vertical: α ≦ ± 45° at operating temperature ≦ 45°C (113°F) possible (if using natural convection)
Storage / Transport	ϑ: -20 – + 60 °C (-4 – +140 °F)
Humidity	Relative humidity 10 - 95 %
Condensation	Non-condensing

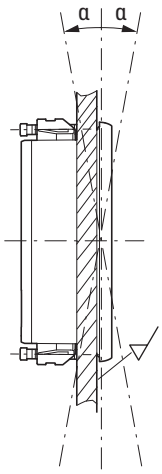

System	
Processor	ARM Cortex-A53, Quad-Core, 1.8 GHz
Internal memory	2 GB DDR4-RAM, 8 GByte eMMC
Cooling	Fanless CPU and system cooling, natural convection-based passive cooling
Operating System	Linux platform from EATON for operating system/web browser and configuration

Display	XH-303-70-A10-A00-2B	XH-303-10-A10-A00-2B	XH-303-15-A10-A00-2B
Display - Type	Widescreen color display, TFT, Multifinger touch		

A.1 Technical data

Display	XH-303-70-A10-A00-2B	XH-303-10-A10-A00-2B	XH-303-15-A10-A00-2B
Screen diagonal	7.0" (17.78 cm)	10.1" (25.65 cm)	15.6" (54.6 cm)
Resolution	1024 x 600 pixels	1280 x 800 pixels	1366 x 768 pixels
Visible screen area	154 x 86 mm	217 x 136 mm	344 x 194 mm

A.1.4 Port and interface specifications

Tab. 7: Interfaces, communication

Type		XH-303-70-A10-A00-2B	XH-303-10-A10-A00-2B	XH-303-15-A10-A00-2B
Quantity				
	Ethernet	1	1	1
	USB host 2.0	1	1	1
Type				
	Ethernet	RJ-45 socket, 8-pole, 2 LEDs (CAT5e/6), LAN1, 1000/100/10 Mbps		
	USB host	USB 2.0, not galvanically isolated, plug type A, Full power (500 mA)		

A.1.5 Information on the power supply

The following specifications apply to all XH-303 units.

Power Supply	
Rated operating voltage	+ 24 VDC SELV (safety extra low voltage)
Permissible Voltage range	Effective: 19.2-30.0 V DC (rated operating voltage -20%/+25%)
	Absolute with ripple: 18.0-31.2 V DC
	Battery powered: 18.0-31.2 V DC (rated operating voltage -25%/+30%); 35 V DC for a duration of < 100 ms
Voltage dips	Ability to accommodate brief voltage dips ≦ 10 ms from rated operating voltage (24 V DC), ≦ 5 ms from undervoltage (19.2 V DC)
Power consumption XH-303-70-A10-A00-2B,	max. 14.4 W Power consumption at 24 V DC: 11.9 W for basic device + 2.5 W for USB module
XH-303-10-A10-A00-2B,	max. 15.4 W Power consumption at 24 V DC: 12.5 W for basic device + 2.5 W for USB module
XH-303-15-A10-A00-2B	max. 19.2 W Power consumption at 24 V DC: 16.7 W basic device + 2.5 W USB module
Fuse	Yes (fuse not accessible)
Potential isolation	No

Electrical current		**7.0" display**	**10.1" display**	**15.6" display**
	Ie	≦ 0.6 A 24 V_{DC}	≦0.64 A 24 V_{DC}	≦ 0.8 A 24 V_{DC}
	I_{TH}	< 1.0 A^2s	< 1.0 A^2s	< 1.0 A^2s

A.1.6 Approvals and declarations

The following specifications apply to all XH-303 units.

Approvals and declarations		
cUL	UL 61010-2-201, UL61010-1, UL File No. E205091	
CE	XH-303 units comply with all applicable European Union (EU) Directives and feature the CE marking.	
Applied standards and directives		
EMC (relevant for CE)		2004/108/EEC 2014/30/EU
	IEC/EN 61000-6-2	Interference immunity for industrial environments
	IEC/EN 61000-6-3	Emitted interference for residential areas
Security		
	DIN EN 60529	Degrees of protection provided by enclosures
Mechanical shock resistance	IEC/EN 60068-2-27	15g /11ms
Vibration	IEC/EN 60068-2-6	Displacement amplitude: 5–9 Hz: 3.5 mm; 9–60 Hz: 0.15 mm Acceleration amplitude: 60–150 Hz: 2 g
Free fall, packaged	IEC/EN 60068-2-31	
RoHS	Directive 2011/65/EC	conform
Ambient climatic conditions		
Air pressure (in operation)		795 - 1080 hPa
		Max. 2000 m above sea level
Temperature		
	Operation	ϑ: ± 0 – +50 °C (+32 – +122 °F)
	Mounting position	XH-303-70-A10-A00-2B, XH-303-10-A10-A00-2B α ≦ ± 45°, T ≦ 50 °C (122 °F) XH-303-15-A10-A00-2B α ≦ ± 10°, T ≦ 50 °C (122 °F) α ≦ ± 45°, T ≦ 45 °C (113 °F) Inclination from vertical: α ≦ ± 45° at operating temperature ≦ 45°C (113°F) possible (if using natural convection)
	Storage / Transport	ϑ: -20 – + 60 °C (-4 – +140 °F)
Humidity		Relative humidity 10 - 95 %
	Condensation	Non-condensing

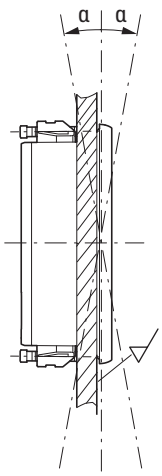

A.2 Further usage information

Hardware

For more information on additional devices and modules, please refer to the following documentation:

Installation instructions XH-303-… IL048020ZU

Download Center,Eaton Online Catalog

Enter "XH300" into the search box and the catalog will take you directly to the corresponding product group in the Automation, Control and visualization section.

Eaton.com/documentation

Eaton.com/ecat

Product information

For up-to-date information, please consult the product page on the Internet.

Eaton.com/XH300 HMI Web Panel

Alphabetical index

A

Aeration and de-aeration 31
After Sales Service 2
Ambient climatic conditions 30, 82, 89, 93
Approvals 93

B

Brand names
  Product names 2

C

Capacitive multitouch 80
Cleaning 80
Commissioning 46
Company information 2
Connections
  External 42
Cooling 89
Copy-protected 2
Copyright 2
CTRL button 18
Current 39, 92

D

Damage 35
Declarations 93
Degree of protection 89
Description 14
Dimensions 86
  10.1" Front mounting display 87
  15.6" Front mounting display 88
Directives 93
Display 18
Disposal
  Recycling 84
Download Center 94

E

ecat 94
Enclosure material 89
Equipment supplied 34
Ethernet 45
Ethernet 1 ..... 19, 43

F

Faults 79
Features 14
Firmware Update 21
Front 18
Front mounting 36
Function 14
Further reading 94

G

General data 89

H

Hazards
  Device-specific 26

I

Initial commissioning 47
Installation 30
Installation position
  Clearances 32

Selection 30
Intended use 16
Interfaces 19, 91
7.0" Display front mounting 91
Basic 43
Equipment 19
Ethernet 45
Type 19, 43
USB host 44
USB peripheral devices 44

L

Label 21
Lifespan
Backlight 48
Location of use 30

M

Maintenance 80
Manuals 94
Materials used 84
Missing parts 35
Mounting 35
Mounting cutout 33
Mounting distance 32

N

Nameplate 19, 21

O

Online Catalog 94
Operating elements 18
Operating System 89
Operation
Proper 25
Original Operating Instructions 2

P

Package contents 34
Part number 20
PCT 80
Ports 42
Power consumption 39, 92
Power supply 39-40, 92

R

Repairs 81

S

Safety 23
Sealing 35
Service 21
Standards 93
Std. pack 34
Storage 82
Support 21
System 89

T

Technical data 86
Touch-Sensor 89
Transit damage 34
Transport 82
Troubleshooting 79

U

USB host 19, 43-44
USB peripheral devices 44

V

Versions 17, 20
Voltage range 39, 92

W

Web Config App 51
Weight 86

Eaton is an intelligent power management company dedicated to improving the quality of life and protecting the environment for people everywhere. We are guided by our commitment to do business right, to operate sustainably and to help our customers manage power – today and well into the future.
By capitalizing on the global growth trends of electrification and digitalization, we're accelerating the planet's transition to renewable energy, helping to solve the world's most urgent power management challenges, and doing what's best for our stakeholders and all of society.

Founded in 1911, Eaton has been listed on the NYSE for nearly a century.
We reported revenues of $19.6 billion in 2021 and serve customers in more than 170 countries.

For more information, visit Eaton.com. Follow us on Twitter and LinkedIn.

Powering Business Worldwide

Eaton Industries GmbH
Hein-Moeller-Str. 7–11
D-53115 Bonn

© 2022 Eaton Corporation
01/2023 MN048029EN (PMCC)