LF (70/455 kHz)
BIS C-122-04/L
Order Code: BIS0011

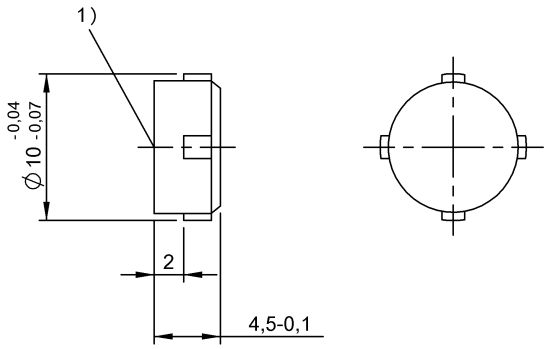

1) Sensing surface

Basic features

Antenna type	round
Approval/Conformity	CE UKCA cULus WEEE
EN 55011	Size 1, Cl. A
Principle of operation	Data carrier

Electrical data

Memory organization	32 × 8 bits
Programming cycles	up to 30 °C: 1,000,000 up to 70 °C: 500,000
Programming time	for 1x8 bits: 0.3s for 32x8 bits: 0.6s
Read cycles	Unlimited
Read time	for 32x8 bits: 0.19 s

Environmental conditions

Ambient temperature	0...70 °C
Continuous shock load	yes
EN 60068-2-27, Shock	yes
EN 60068-2-32 Free fall	yes
EN 60068-2-6, Vibration	yes
IP rating	IP68
Storage temperature	-30...85 °C

Functional Characteristics

Memory type	EEPROM
User data, read/write	511 Byte

Material

Housing material	Epoxy-resin/fiberglass

Mechanical data

Application weight	0.70 g
Dimension	Ø 10 x 4.5 mm
Installation	metal-free (clear zone) on metal flush in metal

Remarks

Only together with converter BIS C-901 or BIS C-6xx and the appropriate read/write head.
Values are under rated conditions unless otherwise specified.
For installation requirements see corresponding read/write head.
Time specification includes data check.
IP68 tested according to BWN Pr 36
On the last page only 31x8 bits are usable.
For installation in hole Ø10 H11 (glue)