HF (13.56 MHz)

BIS M-112-02/L

Order Code: BIS0046

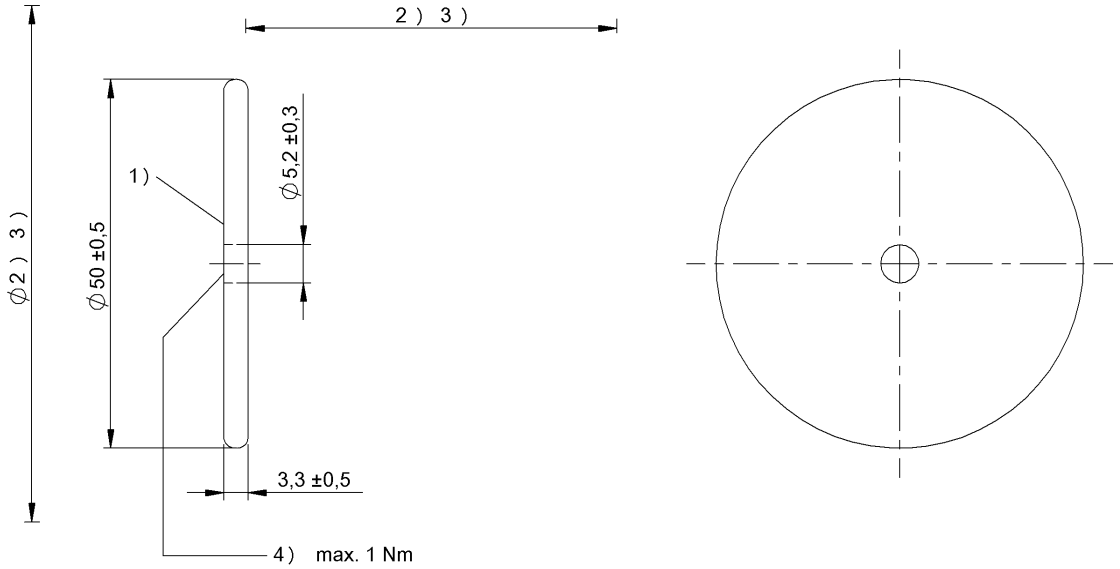

1) Sensing surface, 2) Clear zone, 3) see corresponding R/W head, 4) Tightening torque

Basic features

Antenna type	round
Approval/Conformity	CE UKCA WEEE
EN 55011	Size 1, Cl. A
EN 55022	Size 1, Cl. B
Food compatibility	Directive 02/72/EC
Food compatibility	Directive 02/72/EC
Principle of operation	Data carrier

Electrical data

Data retention time/years	≥ 10 at 55 °C
Memory organization	250 × 8 bits
Programming cycles	≥ 10,000,000,000
Programming time	for 16 bytes: 0.060s
Read cycles	Unlimited
Read time	User ID for 8 bytes: 0.02 s for 16 bytes: 0.03 s

Environmental conditions

Ambient temperature	-25...85 °C
Continuous shock load	yes
EN 60068-2-27, Shock	yes
EN 60068-2-32 Free fall	yes
EN 60068-2-6, Vibration	yes
IP rating	IP68
Storage temperature	-25...85 °C
Storage temperature temporary	140 °C 1x100 h -40 °C...90 °C 1x1000 h
Temperature shock	-20 °C...+85 °C 50x10 min. with transposition in 30 s

Functional Characteristics

Memory type	FRAM
Supported data carrier types	DIN ISO 15693
UID serial number, read-only	8 Byte
User data, read/write	2000 Byte

Material

Housing material	PA 6

Mechanical data

Application weight	9.50 g
Dimension	Ø 50 x 3.3 mm
Installation	metal-free (clear zone)

Remarks

Values are under rated conditions unless otherwise specified.
Only when used together with the appropriate read/write head.
For installation requirements see corresponding read/write head.
Time specification includes data check.
Torsional, bending and impact loading is not permitted.
Recommended screw: M5, 8.8
For installation in metal: Observe clear zone.
IP68 tested according to BWN Pr 36