MKS-D 10/1300-1 P DIODE MODULES

Mounting rail / screw-type terminal

Art.No.: 67045
Weight: 0.068 kg
Country of origin: CZ
Model designation: MKS - D 10/1300-1 P

10 diodes
Common potential cathode

[Link to Product]

Illustration



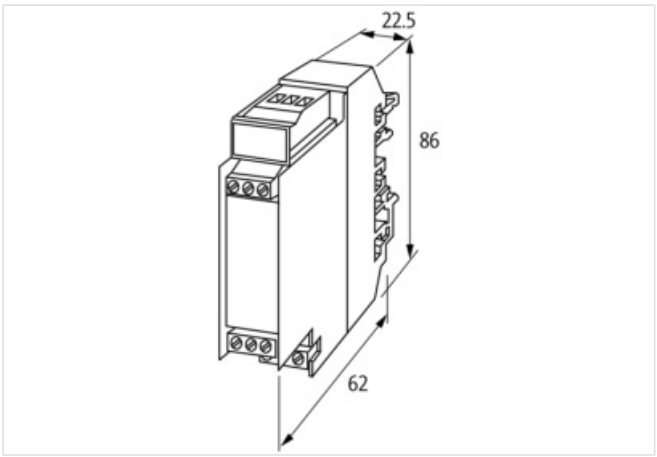

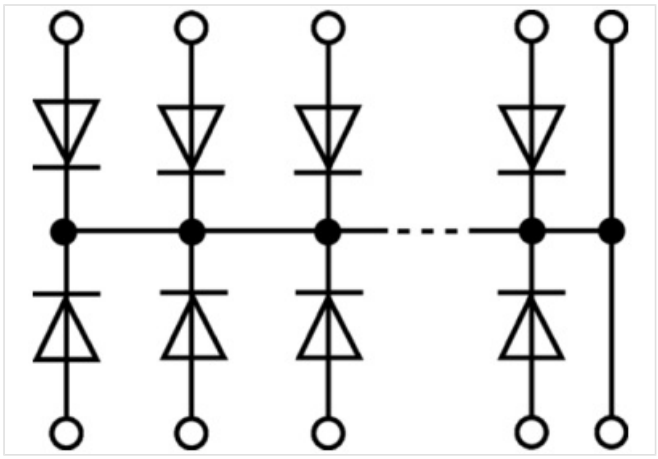

Product may differ from Image

Commercial data

URL Webshop	https://shop.murrelektronik.com/67045
GTIN	4048879041935
EU-Customs tariff number	85411000
US-Customs tariff number	8541100080
ECLASS-6.0	27371010

The information in this Product-PDF has been compiled with the utmost care.
Liability for the correctness completeness and topicality of the information is restricted to gross negligence. Version: 2026-08-27

ECLASS-6.1	27371010
ECLASS-7.0	27371010
ECLASS-7.1	27371010
ECLASS-8.0	27371010
ECLASS-8.1	27371010
ECLASS-9.0	27371010
ECLASS-9.1	27371010
ECLASS-10.0.1	27371010
ECLASS-10.1	27371010
ECLASS-11.0	27371010
ECLASS-11.1	27371010
ECLASS-12.0	27371010
ECLASS-13.0	27371010
ECLASS-14.0	27371010
ETIM-5.0	EC002780
ETIM-6.0	EC002780
ETIM-7.0	EC002780
ETIM-8.0	EC002780
ETIM-9.0	EC002780
ETIM-10.0	EC002780
customs tariff number	85411000
EAN	4048879041935
Packaging unit	1
Electrical data | Supply	
Operating voltage AC max.	48 V
Operating voltage DC max.	48 V
Mechanical data | Mounting data	
Height	86 mm
Width	22,5 mm
Depth	62 mm
Mounting method	geschnappt
Suitable for mounting type	Mounting rail TH35, (EN 60715), G32
Environmental characteristics | Climatic	
Operating temperature min.	-20 °C
Operating temperature max.	60 °C
Connection type 1	
Family construction form	terminal
No. of poles	12
Gender	female
Connection	Screw terminals SK

The information in this Product-PDF has been compiled with the utmost care.
Liability for the correctness completeness and topicality of the information is restricted to gross negligence. Version: 2026-08-27