Adaptor M12 male / M8 female A-cod.

4-pol., conf. 1,2,3,4

Art.No.: 7000-42211-0000000
Weight: 0.013 kg
Country of origin: DE
Model designation: MSF04L0-A-T

Adapter
Male - female
M12 – M8, 4-pole
for M12 distribution box, 4-pole
M12, A-coded
Art-No. 7005 - M12/M8 Lite - (plastic hexagonal screw) on request

Link to Product

Illustration



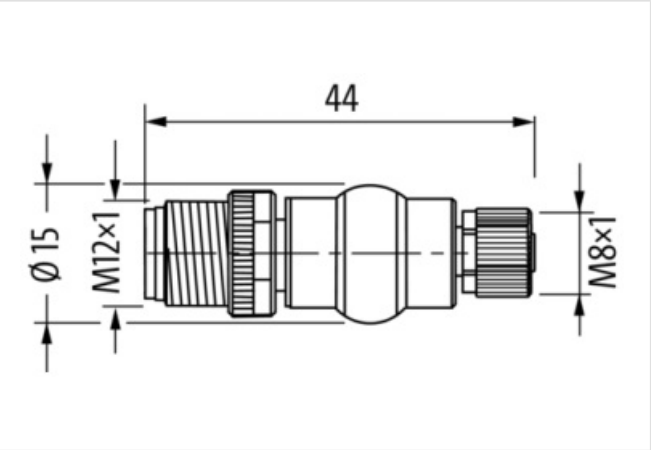

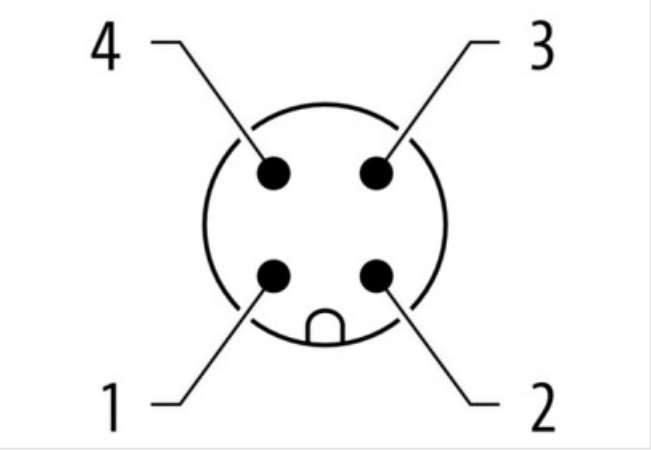

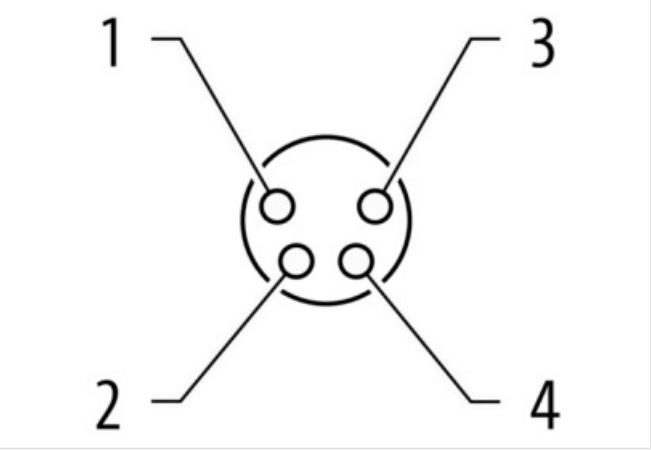

The information in this Product-PDF has been compiled with the utmost care.
Liability for the correctness completeness and topicality of the information is restricted to gross negligence. Version: 2026-08-27

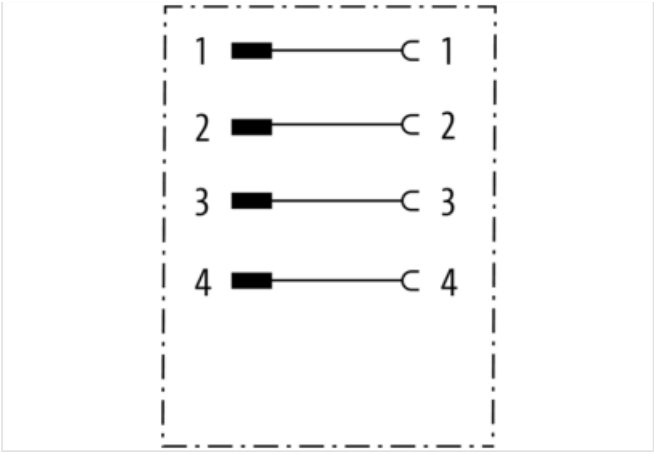

Product may differ from Image

Side 1	
Family construction form	M12
No. of poles	4
Coding	A
Mounting method	inserted, screwed
Threaded hole	M12 x 1
Tightening torque	0,6 Nm
Width across flats	SW13
Material contact	Copper alloy
Side 2	
Family construction form	M8
No. of poles	4
Coding	A
Mounting method	inserted, screwed
Threaded hole	M8 x 1
Tightening torque	0,4 Nm
Width across flats	SW9
Material contact	Copper alloy
Commercial data	
URL Webshop	https://shop.murrelektronik.com/7000-42211-0000000
EU-Customs tariff number	85366990
US-Customs tariff number	8536694020
ETIM-9.0	EC001855
ETIM-10.0	EC001855
customs tariff number	85366990
EAN	4048879143196
Packaging unit	1
Electrical data | Supply	
Operating voltage AC max.	50 V
Operating voltage DC max.	60 V
Current operating per contact max.	4 A
Operating voltage AC max. (UL-listed)	30 V
Operating voltage DC max. (UL-listed)	30 V

The information in this Product-PDF has been compiled with the utmost care.
Liability for the correctness completeness and topicality of the information is restricted to gross negligence. Version: 2026-08-27

Diagnostics	
Status indication LED	No
Installation | **Connection**	
Mating cycles min.	100
Device protection | **Electrical**	
Degree of protection (EN IEC 60529)	IP67
Additional condition protection degree	inserted, screwed
Pollution Degree	3
Rated surge voltage	1,5 kV
Material group (IEC 60664-1)	I
Mechanical data | **Material data**	
housing	PUR
Coating contact	gold plated
Locking material	Zinc die-casting
Coating locking	Nickeled
Gasket	FKM
Mechanical data | **Mounting data**	
Mounting method	Schraubgewinde
Environmental characteristics | **Climatic**	
Operating temperature min.	-30 °C
Operating temperature max.	85 °C
Important installation notes	
Note on bending radius	**Attention:** Observe the permissible bending radii when laying cables, as the IP protection class can be endangered by excessive bending forces.
Note on strain relief	Protect the connectors by suitable measures from mechanical loads, e.g. by the usage of cable ties.
Conformity	
Product standard	EN IEC 61076-2-101 (M12), EN IEC 61076-2-114 (M8)

The information in this Product-PDF has been compiled with the utmost care.
Liability for the correctness completeness and topicality of the information is restricted to gross negligence. Version: 2026-08-27