Manual

06/26 MN040059EN

PowerXL™

DC1...20... and DC1...OE1
Variable Frequency Drives

Powering Business Worldwide

All proprietary names and product designations are brand names or trademarks registered to the relevant title holders.

Service
For service and support, please contact your local sales organization.

eaton.com/contacts
eaton.com/aftersales

For customers in US/Canada contact:

EatonCare Customer Support Center

Call the EatonCare Support Center if you need assistance with placing an order, stock availability or proof of shipment, expediting an existing order, emergency shipments, product price information, returns other than warranty returns, and information on local distributors or sales offices.

Voice: 877-ETN-CARE (386-2273) (8:00 a.m. – 6:00 p.m. EST)
After-Hours Emergency: 800-543-7038 (6:00 p.m. – 8:00 a.m. EST)

Drives Technical Resource Center

Voice: 877-ETN-CARE (386-2273) option 2, option 6
(8:00 a.m. – 5:00 p.m. Central Time U.S. [UTC-6])
email: TRCDrives@Eaton.com
page: eaton.com/drives

Original operating manual
The German-language edition of this document is the original operating manual.

Translation of the original operating manual
All editions of this document other than those in German language are translations of the original operating manual.

1. Edition 2020, publication date 02/20
2. Edition 2024, publication date 06/24
3. Edition 2026, publication date 06/26

© 2020 by Eaton Industries GmbH, 53105 Bonn

See list of revisions in the chapter „About this manual“

All rights reserved, also for the translation.

No part of this manual may be reproduced, stored in a retrieval system, or transmitted in any form or by any means, electronic, mechanical, photocopying, micro-filming, recording or otherwise, without the prior written permission of Eaton Industries GmbH, Bonn.

Subject to alteration.

Danger!
Dangerous electrical voltage!

Before commencing the installation

- Disconnect the power supply of the device.
- Ensure that devices cannot be accidentally retriggered.
- Verify isolation from the supply.
- Ground and short-circuit.
- Cover or enclose neighbouring units that are live.
- Follow the engineering instructions (IL) of the device concerned.
- Only suitably qualified personnel in accordance with EN 50110-1/-2 (VDE 0105 Part 100) may work on this device/system.
- Before installation and before touching the device ensure that you are free of electrostatic charge.
- The functional earth (FE) must be connected to the protective earth (PE) or to the potential equalizing. The system installer is responsible for implementing this connection.
- Connecting cables and signal lines should be installed so that inductive or capacitive interference do not impair the automation functions.
- Install automation devices and related operating elements in such a way that they are well protected against unintentional operation.
- Suitable safety hardware and software measures should be implemented for the I/O connection so that a cable or wire breakage on the signal side does not result in undefined states in the automation device.
- Ensure a reliable electrical isolation of the low voltage for the 24 V supply. Only use power supply units complying with IEC 60364-4-41 or HD 384.4.41 S2 (VDE 0100 part 410).
- Deviations of the mains voltage from the nominal value must not exceed the tolerance limits given in the technical data, otherwise this may cause malfunction and dangerous operation.
- Emergency-Stop devices complying with IEC/EN 60204-1 must be effective in all operating modes of the automation devices. Unlatching the emergency switching off devices must not cause restart.
- Built-in devices for enclosures or cabinets must only be run and operated in an installed state, desk-top devices or portable devices only when the housing is closed.
- Measures should be taken to ensure the proper restart of programs interrupted after a voltage dip or failure. This should not cause dangerous operating states even for a short time. If necessary, emergency switching off devices should be implemented.
- Wherever faults in the automation system may cause damage to persons or property, external measures must be implemented to ensure a safe operating state in the event of a fault or malfunction (for example, by means of separate limit switches, mechanical interlocks, etc.).
- During operation, and depending on their degree of protection, variable frequency drives may have live, uninsulated, moving, and/or rotating parts, as well as hot surfaces.
- The impermissible removal of the required cover, improper installation or incorrect operation of the motor or variable frequency drive can cause the failure of the device and serious injury and/or material damage.
- Comply with all applicable national accident prevention regulations (e.g. BGV A3) when working with energized variable frequency drives.
- The electrical installation must be carried out in accordance with the relevant regulations (e.g. with regard to cable cross sections, fuses, PE).
- All transport, installation, commissioning and maintenance work must only be carried out by trained personnel (observe IEC 60364, HD 384 or DIN VDE 0100 and national accident prevention regulations).
- If applicable, systems in which variable frequency drives are installed must be equipped with additional monitoring and protective devices in accordance with the applicable safety regulations, e.g., the German Equipment and Product Safety Act, accident prevention regulations, etc. Making changes to the variable frequency drives by using the operating software is allowed.
- Keep all covers and doors closed during operation.
- When designing the machine, the user must incorporate mechanisms and measures that limit the consequences of a drive controller malfunction or failure (an increase in motor speed or the motor?9s sudden stop) so as to prevent hazards to people and property, e.g.:
  - Additional stand-alone devices for monitoring parameters that are relevant to safety (speed, travel, end positions, etc.)
  - Electrical and non-electrical safety devices (interlocks or mechanical locks) for mechanisms that protect the entire system
  - Due to the possibility of there being capacitors that are still holding a charge, do not touch live device parts or terminals immediately after disconnecting the variable frequency drives from the supply voltage. Heed the corresponding labels on the variable frequency drives

Content

0 About this manual ... 5
0.1 Target group ... 6
0.2 List of revisions ... 6
0.3 Writing conventions ... 7
0.3.1 Hazard warnings of material damages ... 7
0.3.2 Hazard warnings of personal injury ... 7
0.3.3 Tips ... 7
0.4 Documents with additional information ... 8
0.5 Abbreviations ... 8
0.6 Mains supply voltages ... 9
0.7 Units of measurement ... 9

1 DC1 device series ... 10
1.1 Introduction ... 10
1.2 System overview ... 11
1.3 Checking the Delivery ... 12
1.4 Rated operational data ... 13
1.4.1 Rated operational data on the nameplate ... 13
1.4.2 Catalog number selection ... 15
1.4.3 Features ... 16
1.5 Description ... 22
1.5.1 IP20 degree of protection (FS1 to FS4) ... 22
1.5.2 IP66 degree of protection (FS1 to FS3) ... 23
1.6 Voltage categories ... 24
1.7 Selection Criteria ... 27
1.8 Output reduction (derating) ... 28
1.9 Proper use ... 31
1.10 Maintenance and inspection ... 32
1.11 Storage ... 32
1.12 Charging the internal DC link capacitors ... 33
1.13 Service and warranty ... 33

2 Engineering ... 34
2.1 Introduction ... 34
2.2 Electrical power network ... 36
2.2.1 Mains terminal and configuration ... 36
2.2.2 Mains voltage and frequency ... 37
2.2.3 Voltage balance ... 37
2.2.4 Total Harmonic Distortion (THD) ... 38
2.2.5 Reactive power compensation devices ... 38

2.3 Cable cross-sections ... 39
2.4 Safety and switching ... 40
2.4.1 Disconnecting device ... 40
2.4.2 Fuses ... 40
2.4.3 Residual current circuit-breaker (RCD) ... 41
2.4.4 Overvoltage protection ... 41
2.4.5 Mains contactors ... 42
2.5 Mains chokes ... 43
2.6 Radio interference suppression filter ... 44
2.7 Braking resistances ... 45
2.8 Motor chokes ... 48
2.9 Sine filter ... 49
2.10 Switching to the output side ... 50
2.10.1 Contactors ... 50
2.10.2 Switch-disconnectors ... 51
2.10.3 Bypass circuit ... 52
2.10.4 Connecting Motors in Parallel ... 53
2.11 Three-phase motors ... 55
2.11.1 Motor Selection ... 55
2.11.2 Circuit types with three-phase motors ... 56
2.11.3 Permanent magnet motor (PM motor) ... 57
2.11.4 Brushless DC motor (BLDC motor) ... 57
2.11.5 Synchronous reluctance motor (SynRM) ... 58
2.11.6 Single-phase AC motors ... 59
2.11.7 Connecting Ex motors ... 59

3 Installation ... 60
3.1 Introduction ... 60
3.2 Mounting position ... 60
3.3 Mounting ... 61
3.3.1 Mounting position ... 62
3.3.2 Cooling measures ... 62
3.3.3 Fixing ... 64
3.4 IP66 / NEMA4X degree of protection ... 68
3.5 EMC installation ... 69
3.5.1 EMC measures in the control panel ... 69
3.5.2 Earthing ... 71
3.5.3 EMC screw ... 72
3.5.4 Screen earth kit ... 74
3.5.5 EMC cable brackets ... 75
3.5.6 General installation diagram ... 77
3.6 Electrical Installation ... 78
3.6.1 Connection to power section ... 79
3.6.2 Connection on control section ... 91
3.6.3 Thermistor connection ... 105

3.7 Block diagrams ... 106
3.7.1 DC1-1D… ... 107
3.7.2 DC1-12… ... 108
3.7.3 DC1-32…, DC1-34… (in FS1, FS2, FS3) ... 109
3.7.4 DC1-32…, DC1-34… (in FS4) ... 110
3.7.5 DC1-1D…Nx-A6S… ... 111
3.7.6 DC1-1D…Nx-A66… ... 113
3.7.7 DC1-12…-A6S… ... 114
3.7.8 DC1-12…-A66… ... 115
3.7.9 DC1-32…-A6S…, DC1-34…-A6S… ... 116
3.7.10 DC1-32…-A66…, DC1-34…-A66… ... 117
3.8 Insulation testing ... 118
3.9 Protection against electric shock ... 119

4 Operation ... 120
4.1 Checklist for commissioning ... 120
4.2 Operational hazard warnings ... 121
4.3 Commissioning with control signal terminals (default settings) .. 123
4.4 Commissioning with local controls ... 125

5 Parameter ... 127
5.1 Parameter groups ... 127
5.2 Keypad ... 129
5.2.1 Operating unit elements ... 129
5.2.2 Adjust parameters ... 131
5.2.3 Resetting Parameters (RESET) ... 131
5.2.4 Extended parameter set ... 132
5.2.5 “Monitor” submenu ... 133
5.2.6 Control via the keypad ... 134
5.3 Help cards ... 135
5.4 Control signal terminals ... 139
5.4.1 Correspondence between the inputs/outputs and terminals ... 139
5.4.2 Configuration of the control signal terminals ... 143
5.5 Messages ... 157
5.5.1 Fault History ... 157
5.5.2 List of messages ... 158
5.5.3 Fault diagnostics ... 161
5.5.4 Messages after a data transfer with a DX-COM-STICK… ... 162
5.5.5 Operating status indicators ... 162
5.5.6 Operating Displays ... 163
5.6 Parameters ... 164
5.6.1 “Monitor” parameter group ... 164
5.6.2 “Basic” parameter group ... 167
5.6.3 “Extended” parameter group ... 169
5.6.4 “Advanced” parameter group ... 177

6 Technical Data ... 178
6.1 General rating data ... 178
6.2 Specific rated operational data ... 182
6.2.1 DC1-1D…device series ... 183
6.2.2 DC1-12…device series ... 184
6.2.3 DC1-32… device series ... 185
6.2.4 DC1-34…device series ... 187
6.3 Dimensions ... 189
6.3.1 Sizes FS1 to FS3 in IP20 ... 189
6.3.2 Size FS4 in IP20 ... 190
6.3.3 Sizes FS1 to FS4 in IP66 ... 191
6.4 Cable cross-sections ... 192

7 Accessories ... 194
7.1 Fuses ... 194
7.2 Mains contactors ... 197
7.3 Mains chokes ... 200
7.4 Radio interference suppression filter ... 202
7.5 Braking resistances ... 206
7.6 Motor chokes ... 210
7.7 Sine filter ... 212
7.8 All-pole sine filter ... 214
7.9 Device-specific accessories ... 215
7.9.1 DXC-EXT-IO… coupling module ... 215
7.9.2 DXC-EXT-2RO output expansion ... 217
7.9.3 DXC-EXT-2RO1AO output expansion ... 219
7.10 General accessories (List) ... 221

Index ... 222

0 About this manual

This manual goes over the DC1 variable frequency drives belonging to the DC1…20… and DC1…OE1 model series. These models are enhanced versions (E = Enhanced) of the basic DC1-…-N version described in manual MN04020003Z.

Some of the most important enhancements include:

- Coated boards (DC1-…-**C**E1):
  This refers to units in which a conformal coating has been applied to the printed circuit board (PCB). This conformal coating provides enhanced protection from moisture and soiling and helps extend the device's life.
- "Outdoor" devices DC1-...-**O**E1:
  The devices DC1-...-**O**E1 in protection class IP66 have an outdoor rating and are additionally UV-resistant. They can therefore also be installed outdoors.
- Vector mode:
  In addition to standard V/Hz control, DC1-…E1 variable frequency drives also feature a vector control mode for normal induction motors (asynchronous motors) and high-efficiency motors (PM = Permanent magnet motors, BLDC = Brushless DC motors, SyncRM = Synchronous reluctance motors).
- Additional parameters:
  The number of P00-… display parameters has been expanded to 50, while the extended parameter set (P-14 =101) has been expanded to include up to parameter P-58. Moreover, an additional parameter set for high-efficiency motors has been incorporated for vector control (P-14 = 201).
- Fire mode:
  Fire mode refers to a special operating mode available on DC1-…E1 variable frequency drives that ensures that fan and pump motors will continue to run even in the event of a fire.
- Optional accessories:
  For cases in which an external keypad needs to be connected to a DC1-…E1 variable frequency drive, either model DX-KEY-LED2 or DX-KEY-OLED with a software update is required. Meanwhile, DX-COM-STICK2 is the model required when a parameter memory storage device and/or PC communications with Bluetooth are needed. In case of communication via smartphone app (operating system iOS or Android) the Bluetooth communication stick DX-COM-STICK3 is required. DX-KEY-LED and DX-COM-STICK will not work with DC1-…E1 variable frequency drives!

→ This manual describes firmware version 2.11.

0.1 Target group

This manual is intended for engineers and electricians. Electrical engineering and physics-related knowledge and skills will be required in order to be able to commission the corresponding devices.

We assume that you have a good knowledge of engineering basics and that you are familiar with handling electrical systems and machines, as well as with reading technical drawings.

0.2 List of revisions

The following significant amendments have been introduced since previous issues:

Publication date	Page	Keyword	new	modified	deleted
06/26	11	„System overview (example: size FS1, degree of protection IP20)“		✓	
	103	„Using the REV/0/FWD Selector Switch“		✓	
	126	„Selector switch for DC1-…A6S…“		✓	
	163	„Operating Displays“	✓		
	177	„“Advanced“ parameter group“		✓	
	206	„Braking resistances“		✓	
06/24	45	„Braking resistances“		✓	
	178	„EcoDesign 2009/125/EC“	✓		
	127	„Parameter“	✓		
	214	„All-pole sine filter“	✓		
02/20		Initial issue	–	–	–

0.3 Writing conventions

Symbols with the following meaning are used in this manual:

▶ Indicates instructions to be followed.

0.3.1 Hazard warnings of material damages

NOTICE

Warns about the possibility of material damage.

0.3.2 Hazard warnings of personal injury

CAUTION

Warns of the possibility of hazardous situations that may possibly cause slight injury.

WARNING

Warns of the possibility of hazardous situations that could result in serious injury or even death.

DANGER

Warns of hazardous situations that result in serious injury or death.

0.3.3 Tips

→ Indicates useful tips.

→ In order to make it easier to understand some of the figures included in this manual, the variable frequency drive housing, as well as other safety-relevant parts, has been left out. However, it is important to note that the variable frequency drive must always be operated with its housing in its proper place, as well as with all required safety-relevant parts.

→ All the specifications in this manual refer to the hardware and software versions documented in it.

0.4 Documents with additional information

More information on the devices described here can be found on the Internet under:

eaton.com/powerxl

as well as in EATON Download Center:

eaton.com/documentation

In the **Quick Search** box, enter the document name ("MN040059", for example).

0.5 Abbreviations

The following abbreviations are used in this manual:

dec	Decimal (base-10 numeral system)
DS	Default settings
EMC	Electromagnetic compatibility
FE	Functional earth
FS	Frame Size
FWD	Forward run (clockwise rotating field)
GND	Ground (0-V-potential)
hex	Hexadecimal (base-16 numeral system)
ID	Identifier (unique ID)
IGBT	Insulated gate bipolar transistor
LED	Light Emitting Diode (LED)
OLED	Organic Light Emitting Diode
PC	Personal Computer
PDS	Power Drive System
PE ⏚	Protective earth
PES	EMC connection to PE for screened lines
PNU	Parameter number
REV	Reverse run (anticlockwise rotation field active)
ro	Read Only (read access only)
rw	Read/Write (read/write access)
SCCR	Short Circuit Current Rating
UL	Underwriters Laboratories

0.6 Mains supply voltages

The rated operating voltages stated in the following table are based on the standard values for networks with a grounded star point.

In ring networks (as found in Europe) the rated operating voltage at the transfer point of the power supply companies is the same as the value in the consumer networks (e.g. 230 V, 400 V).

In star networks (as found in North America), the rated operating voltage at the transfer point of the utility companies is higher than in the consumer network.
Example: 120 V → 115 V, 240 V → 230 V, 480 V → 460 V.

The DC1 variable frequency drive's wide tolerance range takes into account a permissible voltage drop of 10% (i.e. U_{LN} - 10%) while, in the 400-V category, it takes into account the North American mains voltage of 480 V + 10 % (60 Hz).

The rated mains voltage operational data is always based on mains frequencies of 50/60 Hz within a range of 48 to 62 Hz.

→ The permissible power supply for the DC1 series can be found in → Section 1.4.3 "Features", page 16.

0.7 Units of measurement

Every physical dimension included in this manual uses international metric system units, otherwise known as SI (Système International d'Unités) units. For the purpose of the equipment's UL certification, some of these dimensions are accompanied by their equivalents in imperial units.

Table 1: Unit conversion examples

Designation	US-American Designation	US-American value	SI value	Conversion value
Length	inch	1 in (")	25.4 mm	0.0394
Performance	horsepower	1 HP = 1.014 PS	0.7457 kW	1.341
Torque	pound-force inches	1 lbf in	0.113 Nm	8.851
temperature	Fahrenheit	1 °F (T_F)	-17.222 °C (T_C)	$T_F = T_C \times 9/5 + 32$
Rotational speed	Revolutions per minute	1 rpm	1 min^{-1}	1
Weight	pound	1 lb	0.4536 kg	2.205
Flow rate	cubic feed per minute	1 cfm	1.698 m^3/min	0.5889

1 DC1 device series

1.1 Introduction

Due to their ease of use and high reliability, DC1 PowerXL™ variable frequency drives are ideal for general applications involving three-phase motors. In addition, an integrated radio interference suppression filter and a flexible interface ensure that the inverters meet a number of important needs in the machine building industry when it comes to the optimization of production and manufacturing processes.

For installations in control panels, devices with a performance range of 0.37 (for 230 V) to 22 kW (for 400 V) are available in a compact and sturdy design featuring four available sizes (FS1, FS2, FS3, FS4) and a degree of protection of IP20.

For distributed local installations, there are four sizes covering a performance range of 0.37 (for 230 V) to 22 kW (for 400 V) and featuring a degree of protection of IP66. These models come in two versions: with and without local controls. These local controls include a setpoint potentiometer, a selector switch for switching operating directions, and a lockable main switch on the mains side.

The computer-based drivesConnect parameter configuration program or the drivesConnect mobile Smartphone App ensures data integrity and reduces the time required for commissioning and maintenance.

In addition, the comprehensive accessories available increase the inverters' flexibility in all scopes of application.

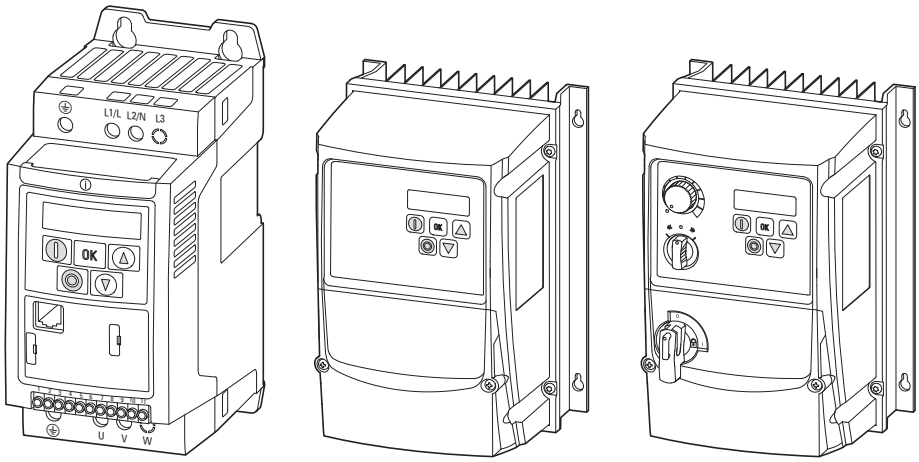

IP20 degree of protection | IP66 degree of protection | IP66 degree of protection, with local controls

Figure 1: Designs and enclosure versions

1.2 System overview

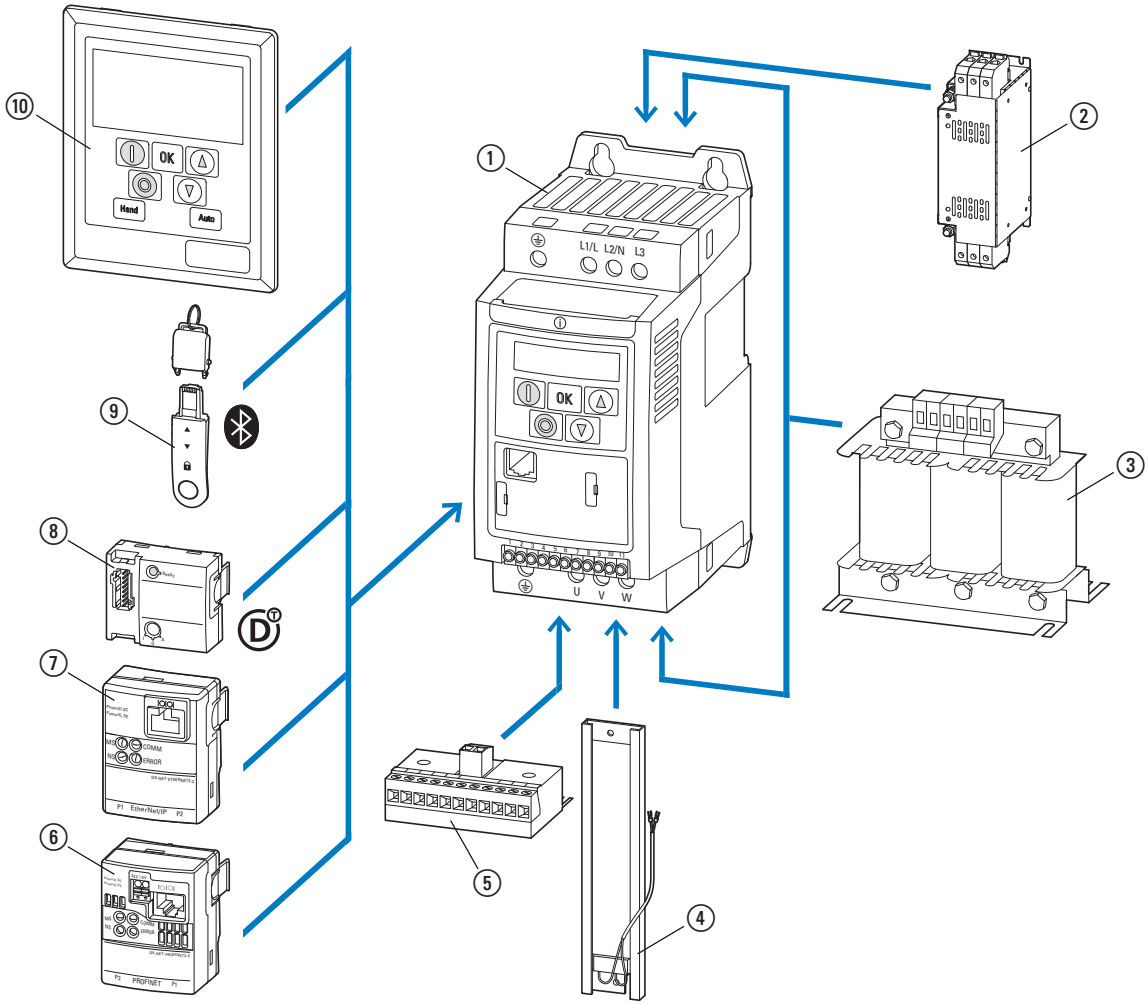

Figure 2: System overview (example: size FS1, degree of protection IP20)

1. DC1-… variable frequency drives
2. Extern radio interference suppression filter DX-EMC…
3. DX-LN… mains choke, DX-LM3-… motor choke, DX-SIN3-… sine filter
4. DX-BR… braking resistance
5. DXC-EXT-… expansion module
6. DX-NET-PROFINET2-2 PROFINET module
7. DX-NET-ETHERNET2-2 EtherNet/IP module
8. DX-NET-SWD3 SmartWire-DT interface
9. DX-COM-STICK3 communication module and accessories (e. g. DX-CBL-… connection cable)
10. DX-KEY-… keypad (external)

1.3 Checking the Delivery

→ Before opening the package, please check the nameplate on it to make sure that you received the correct variable frequency drive.

The DC1 series variable frequency drives are carefully packaged and prepared for delivery. The devices should be shipped only in their original packaging with suitable transportation materials. Please take note of the labels and instructions on the packaging, as well as of those meant for the unpacked device.

Open the packaging with adequate tools and inspect the contents immediately after receipt in order to ensure that they are complete and undamaged.

The packaging must contain the following parts:

- DC1 series variable frequency drive,
- an instruction leaflet
  - IL04020009Z for devices with IP20 degree of protection
  - IL040024ZU for devices with IP20 degree of protection with size FS4
  - IL040059ZU for devices with IP66 degree of protection

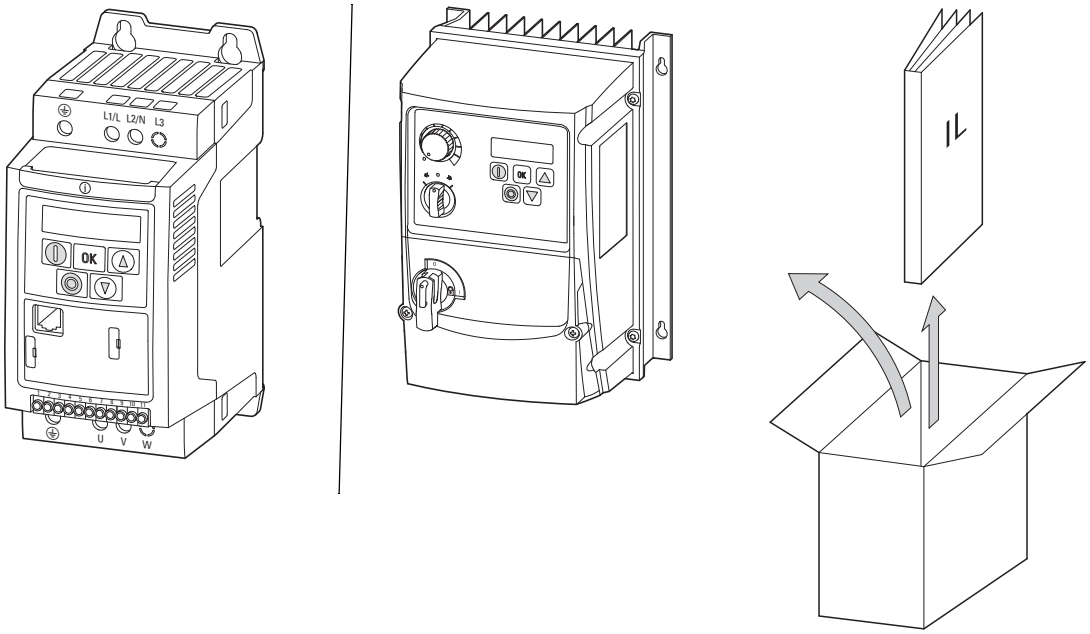

Figure 3: Equipment supplied (example: devices with IP20 / IP66 degree of protection with instruction leaflet)

1.4 Rated operational data

1.4.1 Rated operational data on the nameplate

The device-specific rated operational data of the DC1 variable frequency drive is listed on the nameplate of the device.

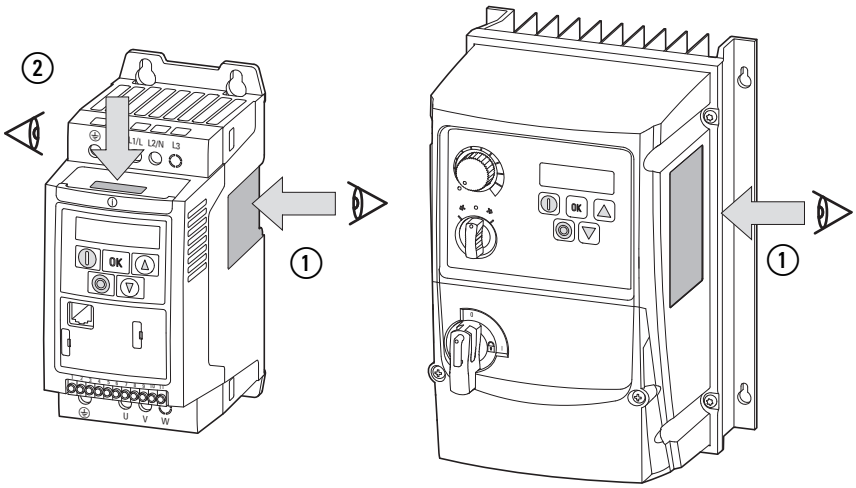

Figure 4: Nameplate location

The nameplate on top (nameplate 2) is a simplified version that can be used to clearly identify the device if the main nameplate (nameplate 1) is blocked by other devices.

Nameplate inscription

The inscription of the nameplate has the following meaning (example):

Inscription	Meaning
DC1-344D1FB-A20CE1	Part no.: DC1 = DC1 series variable frequency drive 3 = Three-phase mains connection / three-phase motor connection 4 = 400 V mains voltage category 4D1 = 4.1 A rated operational current (4-decimal-1, output current) F = Integrated radio interference suppression filter B = Integrated brake chopper A = LED display (7-segment text display) 20 = IP20 degree of protection C = Coated boards E1 = Expansion, version 1
Input	Rated operational data of mains connection Three-phase AC voltage (U_e 3~ AC), 380 - 480 V voltage, 50/60 Hz frequency, input phase current (5.6 A).
Output	Load side (motor) rated operational data: Three-phase AC voltage (0 - U_e), output phase current (4.1 A), output frequency (0 - 500 Hz) Assigned motor output: 1.5 kW with a voltage of 400 V/2 HP with a voltage of 460 V for a four-pole, internally cooled or surface-cooled three-phase asynchronous motor (1500 rpm at 50 Hz/1800 rpm at 60 Hz)
Serial No.:	Serial number
IP20	Degree of protection of the housing: IP 20, UL (cUL) Open Type
Software	Software version (2.0)
25072016	Manufacturing date: 07-25-2016
Max amb. 50 °C	Maximum permissible ambient air temperature (50 °C)
→	Variable frequency drive is an electrical apparatus. Read the manual (in this case MN040059) before making any electrical connections and commissioning.

1.4.2 Catalog number selection

The catalog no. or part no. for the DC1 series of variable frequency drives is made up of four sections.

Series – Power section – Model – Version

The following figure shows it in greater detail:

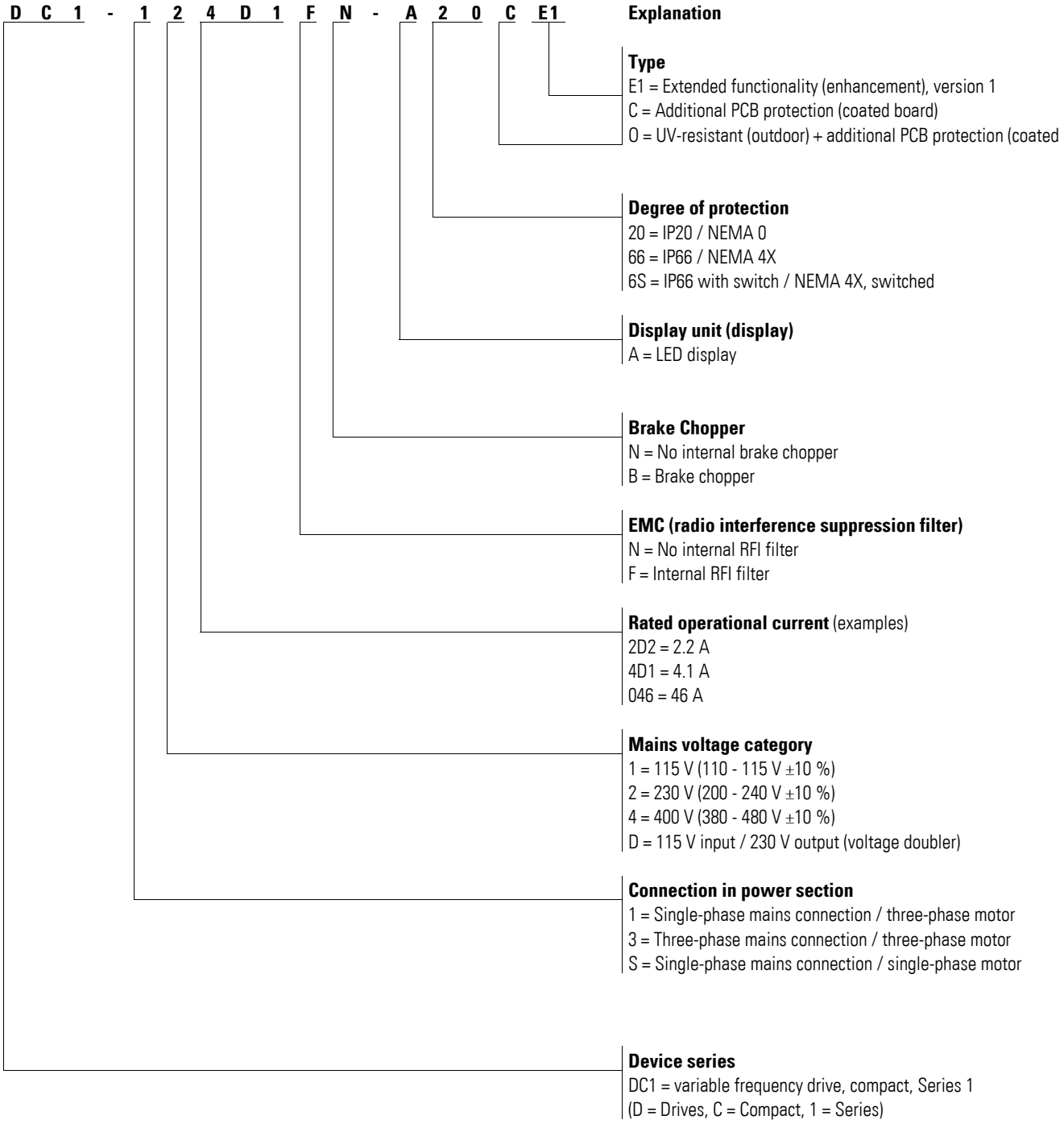

Figure 5: Catalog number selection

1.4.3 Features

1.4.3.1 DC1-1D…device series

Mains voltage: 1 AC 110 - 115 V (±10 %), 50/60 Hz

Output voltage: 3 AC 230 V, 50/60 Hz

→ An internal voltage doubler will increase the mains supply voltage to 230 V (output voltage).

Part no.	rated operational current I_e A	Assigned Instance Motor Power P1) (230 V, 50 Hz) kW	P2) (230 V, 60 Hz) HP	Display (operating unit)	Local controls	Radio interference suppression filter	Degree of protection	Size	Brake chopper
DC1-1D2D3NN-A20CE1	2.3	0.37	1/2	LED	–	–	IP20	FS1	–
DC1-1D2D3NN-A66OE1	2.3	0.37	1/2	LED	–	–	IP66_x	FS1	–
DC1-1D2D3NN-A6SOE1	2.3	0.37	1/2	LED	✓	–	IP66_x	FS1	–
DC1-1D4D3NN-A20CE1	4.3	0.75	1	LED	–	–	IP20	FS1	–
DC1-1D4D3NN-A66OE1	4.3	0.75	1	LED	–	–	IP66_x	FS1	–
DC1-1D4D3NN-A6SOE1	4.3	0.75	1	LED	✓	–	IP66_x	FS1	–
DC1-1D5D8NN-A20CE1	5.8	1.1	1-1/2	LED	–	–	IP20	FS2	✓
DC1-1D5D8NN-A66OE1	5.8	1.1	1-1/2	LED	–	–	IP66_x	FS2	✓
DC1-1D5D8NN-A6SOE1	5.8	1.1	1-1/2	LED	✓	–	IP66_x	FS2	✓

1) As per IEC standards
2) As per UL 61800-5-1, Table DVE.1, March 6, 2015

1.4.3.2 DC1-12…device series

Mains voltage: 1 AC 220 - 240 V (±10 %), 50/60 Hz

Output voltage: 3 AC 220 - 240 V, 50/60 Hz

Part no.	Rated operational current	Assigned Instance Motor Power		Display (operating unit)	Local controls	Radio interference suppression filter	Degree of protection	Size	Brake chopper
	I_e	P[1] (230 V, 50 Hz)	P[2] (220-240V, 60 Hz)						
	A	kW	HP						
DC1-122D3NN-A20CE1	2,3[4]	0,37	1/2	LED	–	–	IP20	FS1	–
DC1-122D3FN-A20CE1	2,3[4]	0,37	1/2	LED	–	✓	IP20	FS1	–
DC1-122D3FN-A66OE1	2,3[3]	0,37	1/2	LED	–	✓	IP66	FS1	–
DC1-122D3FN-A6SOE1	2,3[3]	0,37	1/2	LED	✓	✓	IP66	FS1	–
DC1-124D3NN-A20CE1	4,3[4]	0,75	1	LED	–	–	IP20	FS1	–
DC1-124D3FN-A20CE1	4,3[4]	0,75	1	LED	–	✓	IP20	FS1	–
DC1-124D3FN-A66OE1	4,3[3]	0,75	1	LED	–	✓	IP66	FS1	–
DC1-124D3FN-A6SCE1	4,3[3]	0,75	1	LED	✓	✓	IP66	FS1	–
DC1-127D0NN-A20CE1	7[4]	1,5	2	LED	–	–	IP20	FS1	–
DC1-127D0FN-A20CE1	7[4]	1,5	2	LED	–	✓	IP20	FS1	–
DC1-127D0NB-A20CE1	7[4]	1,5	2	LED	–	–	IP20	FS2	✓
DC1-127D0FB-A20CE1	7[4]	1,5	2	LED	–	✓	IP20	FS2	✓
DC1-127D0FN-A66OE1	7[3]	1,5	2	LED	–	✓	IP66	FS1	–
DC1-127D0FB-A66OE1	7[3]	1,5	2	LED	–	✓	IP66	FS2	✓
DC1-127D0FN-A6SOE1	7[3]	1,5	2	LED	✓	✓	IP66	FS1	–
DC1-127D0FB-A6SOE1	7[3]	1,5	2	LED	✓	✓	IP66	FS2	✓
DC1-12011NB-A20CE1	10,5[4), 5)]	2,2	3	LED	–	–	IP20	FS2	✓
DC1-12011FB-A20CE1	10,5[4), 5)]	2,2	3	LED	–	✓	IP20	FS2	✓
DC1-12011FB-A66OE1	10,5[3), 5)]	2,2	3	LED	–	✓	IP66	FS2	✓
DC1-12011FB-A6SOE1	10,5[3), 5)]	2,2	3	LED	✓	✓	IP66	FS2	✓
DC1-12015NB-A20CE1	15,3[4]	4	5	LED	–	–	IP20	FS3	✓
DC1-12015FB-A66OE1	15,33[3]	4	5	LED	–	✓	IP66	FS3	✓
DC1-12015FB-A6SOE1	15,3[3]	4	5	LED	✓	✓	IP66	FS3	✓

1) As per IEC standards
2) As per UL 61800-5-1, Table DVE.1, March 6, 2015
3) Rated operational current at switching frequencies of up to 8 kHz and ambient temperatures of up to +40 °C
4) Rated operational current at switching frequencies of up to 8 kHz and ambient temperatures of up to +50 °C
5) For UL conformity: Rated operational current at ambient temperatures of up to +45 °C over a period of 24 hours

1.4.3.3 DC1-32… device series

Mains voltage: 3 AC 220 - 240 V (±10 %), 50/60 Hz

Output voltage: 3 AC 220 - 240 V, 50/60 Hz

Part no.	Rated operational current I_e A	Assigned Instance Motor Power P[1] (230 V, 50 Hz) kW	P[2] (220-240V, 60 Hz) HP	Display (operating unit)	Local controls	Radio interference suppression filter	Degree of protection	Size	Brake chopper
DC1-322D3NN-A20CE1	2,3[4]	0,37	1/2	LED	–	–	IP20	FS1	–
DC1-322D3FN-A66OE1	2,3[3]	0,37	1/2	LED	–	✓	IP66	FS1	–
DC1-322D3FN-A6SOE1	2,3[3]	0,37	1/2	LED	✓	✓	IP66	FS1	–
DC1-324D3NN-A20CE1	4,3[4]	0,75	1	LED	–	–	IP20	FS1	–
DC1-324D3FN-A66OE1	4,3[3]	0,75	1	LED	–	✓	IP66	FS1	–
DC1-324D3FN-A6SOE1	4,3[3]	0,75	1	LED	✓	✓	IP66	FS1	–
DC1-327D0NN-A20CE1	7[4]	1,5	2	LED	–	–	IP20	FS1	–
DC1-327D0NB-A20CE1	7[4]	1,5	2	LED	–	–	IP20	FS2	✓
DC1-327D0FB-A20CE1	7[4]	1,5	2	LED	–	✓	IP20	FS2	✓
DC1-327D0FN-A66OE1	7[3]	1,5	2	LED	–	✓	IP66	FS1	–
DC1-327D0FB-A66OE1	7[3]	1,5	2	LED	–	✓	IP66	FS2	✓
DC1-327D0FN-A6SOE1	7[3]	1,5	2	LED	✓	✓	IP66	FS1	–
DC1-327D0FB-A6SOE1	7[3]	1,5	2	LED	✓	✓	IP66	FS2	✓
DC1-32011NB-A20CE1	10,5[4], [5]	2,2	3	LED	–	–	IP20	FS2	✓
DC1-32011FB-A20CE1	10,5[4], [5]	2,2	3	LED	–	✓	IP20	FS2	✓
DC1-32011FB-A66OE1	10,5[3], [5]	2,2	3	LED	–	✓	IP66	FS2	✓
DC1-32011FB-A6SOE1	10,5[3], [5]	2,2	3	LED	✓	✓	IP66	FS2	✓
DC1-32018NB-A20CE1	18[4]	4	5	LED	–	–	IP20	FS3	✓
DC1-32018FB-A20CE1	18[4]	4	5	LED	–	✓	IP20	FS3	✓
DC1-32018FB-A66OE1	18[3]	4	5	LED	–	✓	IP66	FS3	✓
DC1-32018FB-A6SOE1	18[3]	4	5	LED	✓	✓	IP66	FS3	✓

Part no.	Rated operational current	Assigned Instance Motor Power		Display (operating unit)	Local controls	Radio interference suppression filter	Degree of protection	Size	Brake chopper
	I_e	P[1] (230 V, 50 Hz)	P[2] (220-240V, 60 Hz)						
	A	kW	HP						
DC1-32024NB-A20CE1	24[4]	5,5	7-1/2	LED	–	–	IP20	FS3	✓
DC1-32024FB-A20CE1	24[4]	5,5	7-1/2	LED	–	✓	IP20	FS3	✓
DC1-32024FB-A66OE1	24[3]	5,5	7-1/2	LED	–	✓	IP66	FS3	✓
DC1-32024FB-A6SOE1	24[3]	5,5	7-1/2	LED	✓	✓	IP66	FS3	✓
DC1-32030NB-A20CE1	30[4]	7,5	10	LED	–	–	IP20	FS4	✓
DC1-32030FB-A20CE1	30[4]	7,5	10	LED	–	✓	IP20	FS4	✓
DC1-32030FB-A66OE1	30[3]	7,5	10	LED	–	✓	IP66	FS4	✓
DC1-32030FB-A6SOE1	30[3]	7,5	10	LED	✓	✓	IP66	FS4	✓
DC1-32046NB-A20CE1	46[4]	11	15	LED	–	–	IP20	FS4	✓
DC1-32046FB-A20CE1	46[4]	11	15	LED	–	✓	IP20	FS4	✓
DC1-32046FB-A66OE1	46[3]	11	15	LED	–	✓	IP66	FS4	✓
DC1-32046FB-A6SOE1	46[3]	11	15	LED	✓	✓	IP66	FS4	✓

1) As per IEC standards
2) As per UL 61800-5-1, Table DVE.1, March 6, 2015
3) Rated operational current at switching frequencies of up to 8 kHz and ambient temperatures of up to +40 °C
4) Rated operational current at switching frequencies of up to 8 kHz and ambient temperatures of up to +50 °C
5) For UL conformity: Rated operational current at ambient temperatures of up to +45 °C over a period of 24 hours

1.4.3.4 DC1-34…device series

Mains voltage: 3 AC 380 - 480 V (±10 %), 50/60 Hz

Output voltage: 3 AC 380 - 480 V, 50/60 Hz

Part no.	Rated operational current I_e A	Assigned Instance Motor Power P[1] (400 V, 50 Hz) kW	P[2] (440-480 V, 60 Hz) HP	Display (operating unit)	Local controls	Radio interference suppression filter	Degree of protection	Size	Brake chopper
DC1-342D2NN-A20CE1	2,2[4]	0,75	1	LED	–	–	IP20	FS1	–
DC1-342D2FN-A20CE1	2,2[4]	0,75	1	LED	–	✓	IP20	FS1	–
DC1-342D2FN-A66OE1	2,2[3]	0,75	1	LED	–	✓	IP66	FS1	–
DC1-342D2FN-A6SOE1	2,2[3]	0,75	1	LED	✓	✓	IP66	FS1	–
DC1-344D1NN-A20CE1	4,1[4]	1,5	2	LED	–	–	IP20	FS1	–
DC1-344D1NB-A20CE1	4,1[4]	1,5	2	LED	–	–	IP20	FS2	✓
DC1-344D1FN-A20CE1	4,1[4]	1,5	2	LED	–	✓	IP20	FS1	–
DC1-344D1FB-A20CE1	4,1[4]	1,5	2	LED	–	✓	IP20	FS2	✓
DC1-344D1FN-A66OE1	4,1[3]	1,5	2	LED	–	✓	IP66	FS1	–
DC1-344D1FB-A66OE1	4,1[3]	1,5	2	LED	–	✓	IP66	FS2	✓
DC1-344D1FN-A6SOE1	4,1[3]	1,5	2	LED	✓	✓	IP66	FS1	–
DC1-344D1FB-A6SOE1	4,1[3]	1,5	2	LED	✓	✓	IP66	FS2	✓
DC1-345D8NB-A20CE1	5,8[4]	2,2	3	LED	–	–	IP20	FS2	✓
DC1-345D8FB-A20CE1	5,8[4]	2,2	3	LED	–	✓	IP20	FS2	✓
DC1-345D8FB-A66OE1	5,8[3]	2,2	3	LED	–	✓	IP66	FS2	✓
DC1-345D8FB-A6SOE1	5,8[3]	2,2	3	LED	✓	✓	IP66	FS2	✓
DC1-349D5NB-A20CE1	9,5[4]	4	5	LED	–	–	IP20	FS2	✓
DC1-349D5FB-A20CE1	9,5[4]	4	5	LED	–	✓	IP20	FS2	✓
DC1-349D5FB-A66OE1	9,5[3]	4	5	LED	–	✓	IP66	FS2	✓
DC1-349D5FB-A6SOE1	9,5[3]	4	5	LED	✓	✓	IP66	FS2	✓
DC1-34014NB-A20CE1	14[4]	5,5	10	LED	–	–	IP20	FS3	✓
DC1-34014FB-A20CE1	14[4]	5,5	10	LED	–	✓	IP20	FS3	✓
DC1-34014FB-A66OE1	14[4]	5,5	10	LED	–	✓	IP66	FS3	✓
DC1-34014FB-A6SOE1	14[4]	5,5	10	LED	✓	✓	IP66	FS3	✓
DC1-34018NB-A20CE1	18[4]	7,5	10	LED	–	–	IP20	FS3	✓
DC1-34018FB-A20CE1	18[4]	7,5	10	LED	–	✓	IP20	FS3	✓
DC1-34018FB-A66OE1	18[3]	7,5	10	LED	–	✓	IP66	FS3	✓
DC1-34018FB-A6SOE1	18[3]	7,5	10	LED	✓	✓	IP66	FS3	✓

Part no.	Rated operational current I_e A	Assigned Instance Motor Power P[1] (400 V, 50 Hz) kW	P[2] (440-480 V, 60 Hz) HP	Display (operating unit)	Local controls	Radio interference suppression filter	Degree of protection	Size	Brake chopper
DC1-34024NB-A20CE1	24[4]	11	15	LED	–	–	IP20	FS3	✓
DC1-34024FB-A20CE1	24[4]	11	15	LED	–	✓	IP20	FS3	✓
DC1-34024FB-A66OE1	24[3]	11	15	LED	–	✓	IP66	FS3	✓
DC1-34024FB-A6SOE1	24[3]	11	15	LED	✓	✓	IP66	FS3	✓
DC1-34030NB-A20CE1	30[4]	15	20	LED	–	–	IP20	FS4	✓
DC1-34030FB-A20CE1	30[4]	15	20	LED	–	✓	IP20	FS4	✓
DC1-34030FB-A66OE1	30[3]	15	20	LED	–	✓	IP66	FS4	✓
DC1-34030FB-A6SOE1	30[3]	15	20	LED	✓	✓	IP66	FS4	✓
DC1-34039NB-A20CE1	39[4]	18,5	25	LED	–	–	IP20	FS4	✓
DC1-34039FB-A20CE1	39[4]	18,5	25	LED	–	✓	IP20	FS4	✓
DC1-34039FB-A66OE1	39[3]	18,5	25	LED	–	✓	IP66	FS4	✓
DC1-34039FB-A6SOE1	39[3]	18,5	25	LED	✓	✓	IP66	FS4	✓
DC1-34046NB-A20CE1	46[4]	22	30	LED	–	–	IP20	FS4	✓
DC1-34046FB-A20CE1	46[4]	22	30	LED	–	✓	IP20	FS4	✓
DC1-34046FB-A66OE1	46[3]	22	30	LED	–	✓	IP66	FS4	✓
DC1-34046FB-A6SOE1	46[3]	22	30	LED	✓	✓	IP66	FS4	✓

1) As per IEC standards
2) As per UL 61800-5-1, Table DVE.1, March 6, 2015
3) Rated operational current at switching frequencies of up to 8 kHz and ambient temperatures of up to +40 °C
4) Rated operational current at switching frequencies of up to 8 kHz and ambient temperatures of up to +50 °C

1.5 Description

1.5.1 IP20 degree of protection (FS1 to FS4)

The following drawing serves as an example showing the designations used for the elements in DC1 variable frequency drives with an IP20 degree of protection and a size of FS1.

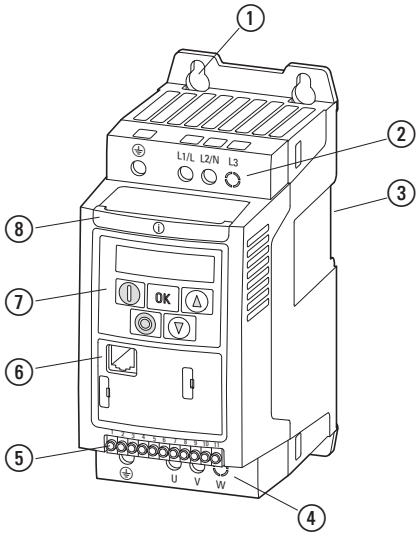

Figure 6: DC1 description (FS1, IP20)

1. Fixing holes (screw fastening)
2. Connection terminals in power section (mains side)
3. Cutout for mounting on mounting rail
4. Connection terminals in power section (motor feeder)
5. Control signal terminals (plug-in)
6. Communication interface (RJ45)
7. Keypad with 5 control buttons and LED display
8. Info card

1.5.2 IP66 degree of protection (FS1 to FS3)

The following drawing serves as an example showing the designations used for the elements in DC1 variable frequency drives with an IP66 degree of protection and a size of FS1.

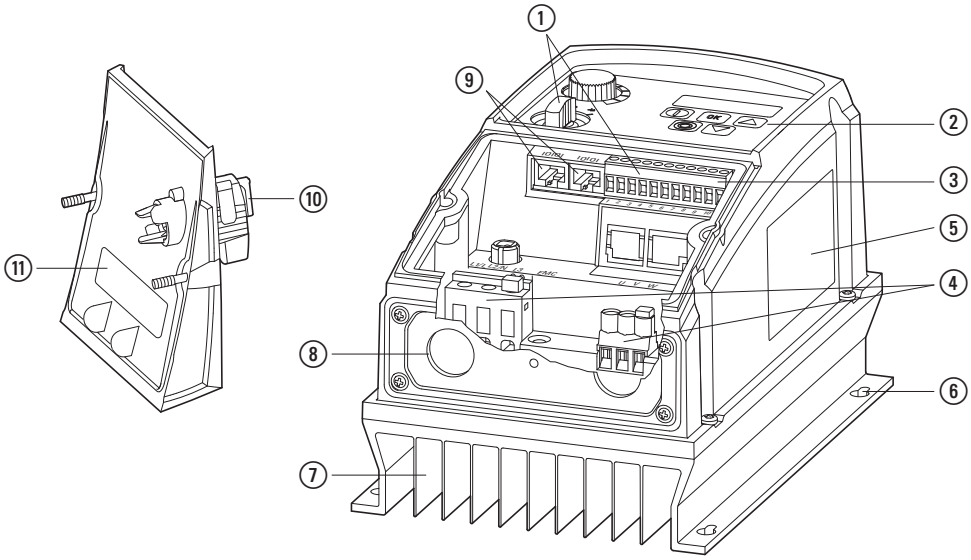

Figure 7: Description (IP66)

1. Local controls (DC1-…-A6S only)
2. Keypad with 5 control buttons and LED display
3. Control terminal (plug-in)
4. Connection terminals in power section
5. Nameplate
6. Fixing holes
7. Heat sink
8. Opening for cable gland
9. Communication interfaces (RJ45)
10. Cover of the connection terminals including switch for DC1-...-A6S...
11. QR code with internet link for further information

In the lower terminal cover ⑪ there is a QR code that refers to an Eaton website with further relevant information.

1.6 Voltage categories

DC1 variable frequency drives are divided into three voltage categories:

- 115 V: 110 - 115 V ±10 % → DC1-**1D**
- 200 V: 200 - 240 V ±10 % → DC1-**12**…, DC1-**32**…
- 400 V: 380 - 480 V ±10 % → DC1-**34**…

→ For more information on how to run single-phase AC motors using the DC1 variable frequency drive, please refer to manual MN040058EN, "DC1-S…20… and DC1-S…OE1 Variable Frequency Drives – Installation and Parameter Manual"

This manual is available on the Eaton website at:

eaton.com/documentation

→ Customer support → Download Center – Documentation

In the **Quick Search** box, enter "MN040058EN".
Then click on **Search**.

- DC1-**1D**…
  - Single-phase mains connection, rated operating voltage of 115 V with internal voltage doubler
  - U_{LN} = 1~, 110 - 115 V ±10 %, 50/60 Hz
  - Ie = 2.3 - 5.8 A
  - Motor: 0.37 - 1.1 kW (230 V, 50 Hz), 1/2 - 1-1/2 HP (230 V, 60 Hz)

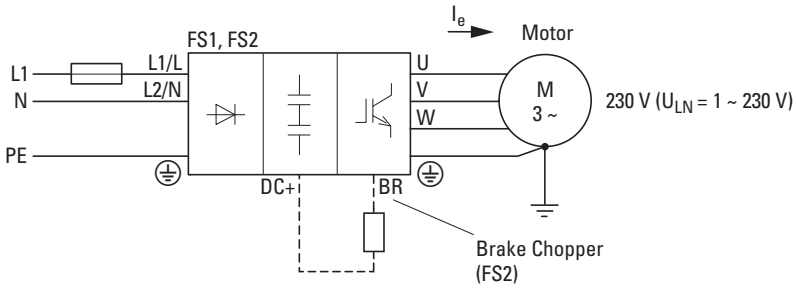

Figure 8: DC1-1D…

- DC1-**12**…
  - Single-phase mains connection, rated operating voltage 230 V
  - U_{LN} = 1~, 200 - 240 V ±10 %, 50/60 Hz
  - I_e = 2.3 - 15.3 A

Motor: 0.37 - 4 kW (230 V, 50 Hz), 1/2 - 5 HP (230 V, 60 Hz)

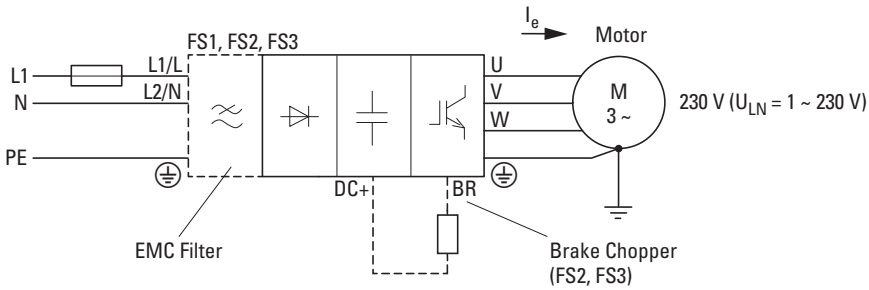

Figure 9: DC1-12…

- DC1-**32**…
  - Three-phase power supply, rated operating voltage 230 V
  - U_{LN} = 3~, 200 - 240 V ±10 %, 50/60 Hz
  - I_e = 2.3 - 46 A
  - Motor: 0.37 - 11 kW (230 V, 50 Hz), 1/2 - 15 HP (230 V, 60 Hz)

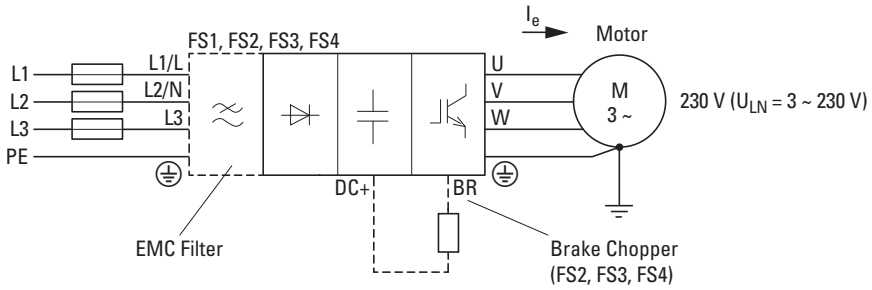

Figure 10:DC1-32…

- DC1-**34**…
  - Three-phase power supply, rated operating voltage 400/480 V
  - U_{LN} = 3~, 380 - 480 V ±10 %, 50/60 Hz
  - I_e = 2.2 - 46 A
  - Motor: 0.75 - 22 kW (400 V, 50 Hz), 1 - 30 HP (460 V, 60 Hz)

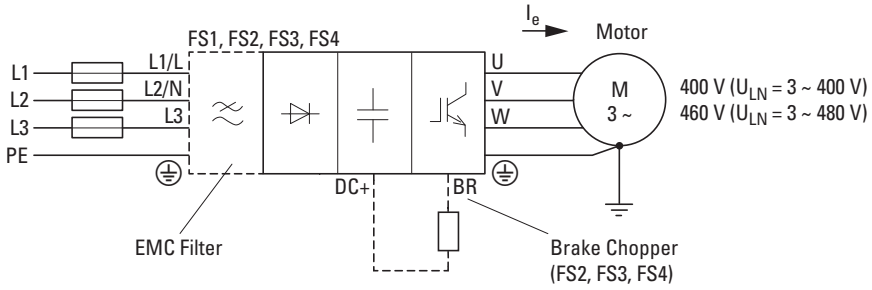

Figure 11:DC1-34…

1.7 Selection Criteria

Select the variable frequency drive according to the supply voltage U_{LN} of the supply system and the rated operational current of the assigned motor. The circuit type (Δ / Y) of the motor must be selected according to the supply voltage.

The variable frequency drive's rated output current I_e must be greater than or equal to the rated motor current.

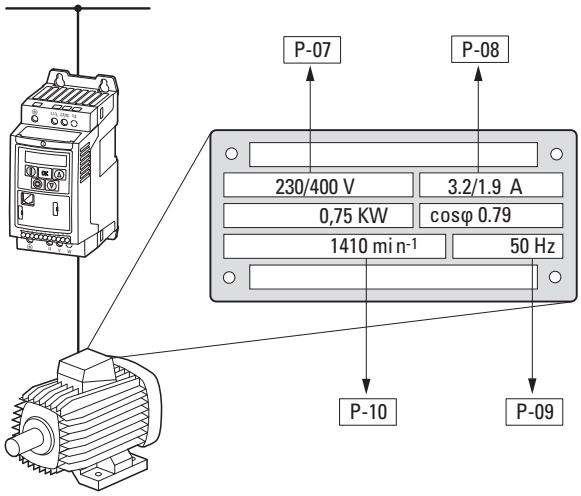

Figure 12:Selection criteria

When selecting the drive, the following criteria must be known:

- Mains voltage = rated operating voltage of the motor (e. g. 3~ 400 V),
- Type of motor (e.g., three-phase asynchronous motor)
- Rated motor current (recommended value, dependent on the circuit type and the power supply)
- Ambient conditions: ambient temperature, control cabinet installation with IP20 degree of protection or direct local installation with IP66 degree of protection.

Example based on figure 12

- Mains voltage: 3~ 400 V, 50 Hz
- Star-connected circuit (400 V)
- Rated operational current: 1.9 A (400 V)
- Control panel installation → IP20 degree of protection
- Ambient air temperature: max. 50 °C without output reduction, IP20

→ Variable frequency drive that should be selected: DC1-342D2FN-A20CE1

- DC1-**34**…: 3-phase main terminal, rated operating voltage: 400 V
- DC1-…**2D2**…: 2.2 A – The variable frequency drive's rated operational current (output current) guarantees that the motor will be supplied with the required rated operational current (1.9 A).

1.8 Output reduction (derating)

Derating the DC1 variable frequency drive / limiting the maximum continuous output current (I_2) will generally be necessary if, during operation:

- The ambient air temperature is higher than 40 °C
- An installation altitude of 1,000 m is exceeded
- The effective switching frequency is higher than the minimum value

The following tables specify the factors that need to be applied when selecting a DC1 variable frequency drive if the drive will be run outside these conditions:

Derating for ambient temperature

Enclosure degree of protection	Maximum permissible ambient air temperature		Derate
	without derating	with derating	
IP20	50 °C	50 °C[1)]	none
IP66	40 °C	50 °C	2.5 % per K

1) 45 °C for continuous operation for 24 hours, as per UL, for DC1-12011…B-A20CE1 and DC1-32011…B-A20CE1

Derating for installation altitude

Enclosure degree of protection	permissible altitude		Derate
	without derating	with derating	
IP20, IP66	1000 m	2000 m – with UL Certification 4000 m maximum – without UL Certification	1 % per 100 m

Derating for switching frequency

Enclosure degree of protection	Switching frequency (P-17), setting (audible) [1)]					
	4 kHz	8 kHz	12 kHz	16 kHz	24 kHz	32 kHz
IP20	none	none	20 %	30 %	40 %	50 %
IP66	none	10 %	25 %	35 %	50 %	50 %

1) The switching frequency's effective rms value will be approximately half the value set with parameter P-17 (double modulation).

For more information on the subject of derating, please refer to Application Note AP040059EN, "DC1…E1 Variable Frequency Drives – Dependency of the output current on switching frequency and ambient air temperature" (AP040059EN_DC1_E1_Derating.pdf).

This manual is available on the Eaton website at:

eaton.com/documentation

→ Customer support → Download Center – Documentation

In the **Quick Search** box, enter "AP040059EN". Then click on **Search**.

Examples showing how to apply derating factors

2.2 kW motor (400 V, 5 A), installation altitude of 2,000 m above sea level, ambient temperature of 45 °C, wall-mounted in mechanical room, required switching frequency of 16 kHz.

a)
Selected variable frequency drive: DC1-349D5FB-A6SOE1, rated operational current of 9.5 A, switching frequency of 8 kHz (default setting).

Required derating factors:

- For the 16 kHz switching frequency: **35 %**
- For the 2,000 m installation altitude: **10 %** (1 % per 100 m above 1,000 m, 2,000 m - 1,000 m = 1,000 m, 1,000 m/100 m = 10)
- For the 45 °C ambient temperature: **12.5 %** (2.5 % per kelvin, 45 °C - 40 °C = 5 K, IP66 degree of protection)

9.5 A - 35 % - 10 % - 12.5 % = (9.5 x 0.65 x 0.9 x 0.875) A = **4.86 A**

The DC1's permissible continuous rated operational current of 4.86 A is lower than the motor's required rated operational current (5 A).

By using the default switching frequency instead (default setting: 8 kHz), the motor can be operated continuously at an altitude of 2,000 m (9.5 A - 10 % - 12.5 % = 6.73 A).

→ Use a variable frequency drive belonging to a higher output class and repeat the calculations in order to ensure that a sufficiently high output current will be available continuously.

b)
In order to be able to work with the required switching frequency of 16 kHz, a larger variable frequency drive would be needed.

Selected variable frequency drive: DC1-34014FB-A6SOE1, rated operational current of 14 A.

Required derating factors:

- For the 16 kHz switching frequency: **35 %**
- For the 2,000 m installation altitude: **10 %** (1 % per 100 m above 1,000 m, 2,000 m - 1,000 m = 1,000 m, 1,000 m/100 m = 10)
- For the 45 °C ambient temperature: **12.5 %**
  (2.5 % per kelvin, 45 °C - 40 °C = 5 K, IP66 degree of protection).

14 A - 35 % - 10 % - 12.5 % = (14 x 0.65 x 0.9 x 0.875) A = approx. **7.2 A**

The DC1-34014FB-A6SOE1 variable frequency drive meets the necessary operating conditions.

1.9 Proper use

The DC1 variable frequency drives are electrical devices for controlling variable speed drives with three-phase motors. They are designed for installation in machines or for use in combination with other components within a machine or system.

The DC1 variable frequency drives are not domestic appliances. They are designed only for industrial use as system components.

If the variable frequency drive is installed in a machine, it is prohibited to place it into operation until it has been determined that the corresponding machine meets the safety and protection requirements set forth in Machinery Safety Directive 2006/42/EC (e.g., by complying with EN 60204). The user of the equipment is responsible for ensuring that the machine use complies with the relevant EU Directives.

The CE markings on DC1 variable frequency drives confirm that the devices meet the requirements set forth in the European Union's Low Voltage and EMC Directives (Directives 2014/35/EU, 2014/30/EU and ROHS 2011/65/EU) when used in their typical drive configuration.

In the described system configurations, DC1 variable frequency drives are suitable for use in public and non-public networks.

A connection of a DC1 variable frequency drive to IT networks (networks without reference to earth potential) is permissible only to a limited extent, since the device's built-in filter capacitors connect the network with the earth potential (enclosure).
In unearthed networks, this can result in hazardous situations or damage to the device (insulation monitoring is required!).

→ To the output (terminals U, V, W) of the DC1 variable frequency drive you must not:

- connect a voltage or capacitive loads (e.g. phase compensation capacitors),
- Connect multiple variable frequency drives in parallel
- make a direct connection to the input (bypass).

→ Always observe the technical data and connection conditions! For additional information, refer to the equipment nameplate or label at the variable frequency drive and the documentation. Any other use will be considered to be an improper use of the device.

1.10 Maintenance and inspection

DC1 series variable frequency drives will be maintenance-free as long as the general rated operational data (see annex) is adhered to and the specific technical data (see annex) for the corresponding ratings is taken into account. Please note, however, that external influences may affect the operation and lifespan of a DC1 variable frequency drive.

We therefore recommend that the devices are checked regularly and the following maintenance measures are carried out at the specified intervals.

Table 2: Recommended maintenance for DC1 variable frequency drives

Maintenance Measure	Maintenance interval
Clean cooling vents (cooling slits)	please enquire
Check to make sure that the fan and the 7-segment display are working properly (Press all five buttons simultaneously, starting with the stop button. Display light will be back on and fan will start immediately.)	6 - 24 months (depending on the environment)
Check the filter in the control panel doors (see the manufacturer's specifications)	6 - 24 months (depending on the environment)
Check all earth connections to make sure they are intact	On a regular basis, at periodic intervals
Check the tightening torques of the terminals (control terminals, power terminals)	On a regular basis, at periodic intervals
Check connection terminals and all metallic surfaces for corrosion	6 - 24 months; when stored, on 12th month latest (depending on the environment)
Motor cables and shield connection (EMC)	According to manufacturer specifications, no later than 5 years
Charge capacitors	12 months (→ Section 1.12, "Charging the internal DC link capacitors")

There are no plans for repairing individual components of DC1 variable frequency drives!

If the DC1 variable frequency drive is damaged by external influences, repair is not possible.

Dispose of the device according to the applicable environmental laws and provisions for the disposal of electrical or electronic devices.

1.11 Storage

If the DC1 variable frequency drive is stored before use, suitable ambient conditions must be ensured at the site of storage:

- Storage temperature: -40 - +60 °C,
- Relative average air humidity: < 95 %, non condensing (EN 50178),
- To prevent damage to the variable frequency drive's internal DC link capacitors, it is not recommended to store the variable frequency drive for more than 12 months (→ Section 1.12, "Charging the internal DC link capacitors").

1.12 Charging the internal DC link capacitors

After extended storage times or extended downtimes during which no power is supplied (> 12 months), the capacitors in the internal DC link must be recharged in a controlled manner in order to prevent damage.
To do this, the DC1 variable frequency drive must be supplied with power, with a controlled DC power supply unit, via two mains connection terminals (e.g. L1 and L2).

In order to prevent the capacitors from having excessively high leakage currents, the inrush current should be limited to approximately 300 to 800 mA (depending on the relevant rating). The variable frequency drive must not be enabled during this time (i.e. no start signal). After this, the DC voltage must be set to the magnitudes for the corresponding DC link voltage (U_{DC} ~ 1.41 x U_e) and applied for one hour at least (regeneration time).

- DC1-12…, DC1-32…: about 324 V DC at U_e = 230 V AC
- DC1-34…: about 560 V DC at U_e = 400 V AC

→ Due to the internal voltage doubler circuit, the capacitors in DC1-1D… variable frequency drives cannot be reformed using the connection terminals!
Please contact your local sales office.

1.13 Service and warranty

In the unlikely event that you have a problem with your DC1 variable frequency drive, please contact your local sales office.

When you call, have the following data ready:

- the exact variable frequency drive part number (see nameplate),
- the date of purchase
- a detailed description of the problem which has occurred with the variable frequency drive.

If some of the information printed on the rating plate is not legible, please state only the data which are clearly legible.

Information concerning the guarantee can be found in the Terms and Conditions Eaton Industries GmbH.

2 Engineering

2.1 Introduction

This chapter describes the most important features in the energy circuit of a drive system (PDS = Power Drive System), which you should take into consideration in your project planning.
It contains instructions that must be followed when determining which device to use with which rated motor output, as well as when selecting protection devices and switchgear, selecting cables, cable entries, and operating the DC1 variable frequency drive.
All applicable laws and local standards must be complied with when planning and carrying out the installation. Not following the recommendations provided may result in problems what will not be covered by the warranty.

An example for a drive system

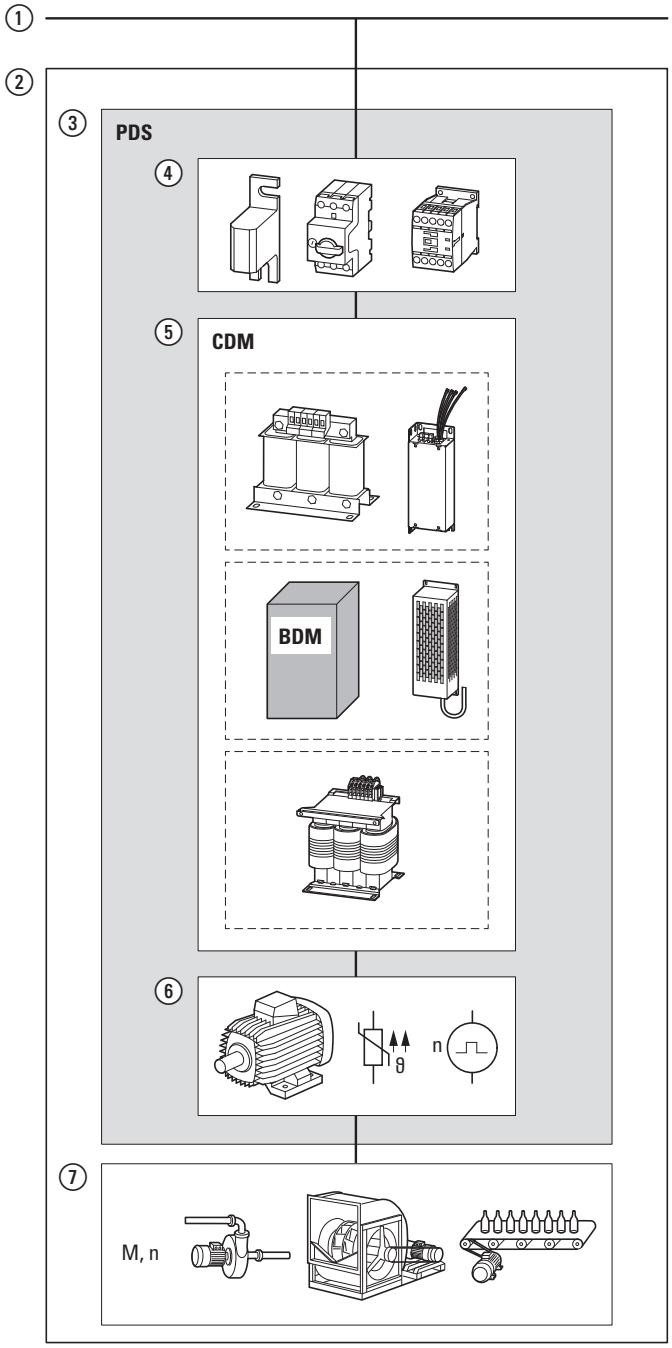

① Electrical supply system
(mains connection, grounding system configuration, mains voltage, frequency, voltage balance, THD, compensation systems)

② Overall system – consisting of motor and load systems

③ PDS = Power drive system

④ Safety and switching
(disconnecting devices, fuses, cable cross-sectional areas, residual current circuit-breakers, mains contactors)

⑤ CDM = Complete drive module:
Variable frequency drive with auxiliary equipment (mains and motor chokes, radio interference suppression filter, brake resistor, sine filter)
BDM = Basic drive module:
DC1 variable frequency drive

⑥ Motor and sensor
(Temperature, motor speed)

⑦ Load system:
Driven system equipment (process, speed, torque)

Figure 13: Drive system example (overall system as its own system or as part of a larger system)

2.2 Electrical power network

2.2.1 Mains terminal and configuration

DC1 variable frequency drives can be connected to and run on all neutral point-grounded AC supply systems (TN-S, TN-C, TT grounding systems; please refer to IEC 60364) without any limitations.

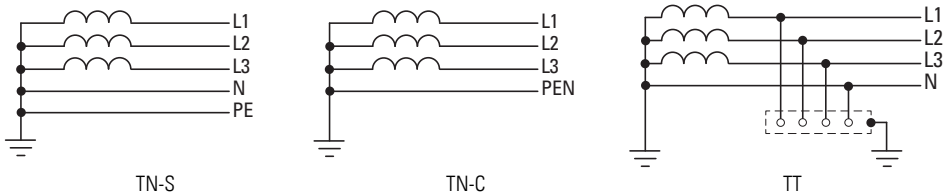

Figure 14: AC supply systems with earthed center point

→ While planning the project, consider a symmetrical distribution to the three main phase conductors, if multiple variable frequency drives with single-phase supplies are to be connected.The total current of all single phase consumers is not to cause an overload of the neutral conductor (N-conductor).

The connection and operation of variable frequency drives to asymmetrically grounded TN networks (phase-grounded delta network "Grounded Delta", USA) or non-grounded or high-resistance grounded (over 30 Ω) IT networks is only conditionally permissible (internal radio interference suppression filters).

→ Operation on non-earthed networks (IT) requires the use of suitable insulation monitoring relays (e.g. pulse-code measurement method)

→ In networks with an earthed phase conductor, the maximum phase-earth voltage must not exceed 300 V AC.

DC1-…-A20CE1 variable frequency drives can be connected to corner-grounded systems or IT grounding systems (not grounded, insulated). When versions featuring an internal radio interference suppression filter (DC1-…**F**N-A20CE1, DC1-…**F**B-A20CE1) are connected to one of these systems, the **EMC** screw(s) needs to be removed and the internal radio interference suppression filter needs to be disconnected

→ Measures for electromagnetic compatibility are mandatory in a power drive system, to meet the legal standards for EMC and Low Voltage Directive.
Good earthing measures are a prerequisite for the effective use of further measures such as screen earth kit or filters here. Without respective grounding measures, further steps are superfluous.

2.2.2 Mains voltage and frequency

The standardized rated operating voltages (IEC 60038, VDE 017-1) of power utilities guarantee the following conditions at the connection point:

- Deviation from the rated value of voltage: maximum ±10 %
- Deviation in voltage phase balance: maximum ±3 %
- Deviation from rated value of the frequency: maximum ±4 %

The broad tolerance band of the DC1 variable frequency drive considers the rated value for
European as (EU: U_{LN} = 230 V/400 V, 50 Hz) and
American as (USA: U_{LN} = 240 V/480 V, 60 Hz) standard voltages:

- 115 V, 50 Hz (EU) and 115 V, 60 Hz (USA) for DC1-1D…,
  110 V -10 % - 115 V +10 % (99 V -0 % - 126 V +0 %)
  The internal voltage doubler will increase the mains voltage of 115 V to produce an output voltage of 230 V (motor voltage).
- 230 V, 50 Hz (EU) and 240 V, 60 Hz (USA) at DC1-12…, DC1-32…
  200 V -10 % - 240 V +10 % (180 V -0 % - 264 V +0 %)
- 400 V, 50 Hz (EU) and 480 V, 60 Hz (USA) at DC1-34…
  380 V -10 % - 480 V +10 % (342 V -0 % - 528 V +0 %)

The permissible frequency range for all voltage categories is 50/60 Hz (48 Hz - 0 % - 62 Hz + 0 %).

2.2.3 Voltage balance

Unbalanced voltages and deviations from the ideal voltage shape may occur in three-phase AC supply systems if the conductors are loaded unevenly and if large output loads are connected directly. These supply voltage unbalances may cause the diodes in the variable frequency drive's rectifier bridge converter to be loaded unevenly, resulting in premature diode failure.

→ In the project planning for the connection of three-phase supplied variable frequency drives (DC1-**3**…), consider only AC supply systems that handle permitted asymmetric divergences in the mains voltage ≦ +3 %.

If this condition is not fulfilled, or symmetry at the connection location is not known, the use of an assigned main choke is recommended.

→ For the rated mains contactors for DC1 variable frequency drives, please refer to → Section 7.2, "Mains contactors", page 197.

2.2.4 Total Harmonic Distortion (THD)

The THD value (THD = Total Harmonic Distortion) is defined in standard IEC/EN 61800-3 as the ratio of the rms value of all harmonic components to the rms value of the fundamental frequency.

→ In order to reduce the THD value (up to 30%), it is recommended to use a DX-LN… mains choke (→ Section 7.3, "Mains chokes", page 200).

2.2.5 Reactive power compensation devices

Compensation on the power supply side is not required for the variable frequency drives of the DC1 series. From the AC power supply network they only take on very little reactive power of the fundamental harmonics (cos φ ~ 0.98).

→ In the AC supply systems with non-choked reactive current compensation devices, current deviations can enable parallel resonance and undefinable circumstances.

In the project planning for the connection of variable frequency drives to AC supply systems with undefined circumstances, consider using mains chokes.

2.3 Cable cross-sections

The mains cables and motor cables must be sized as required by local standards and by the load currents that will be involved.

The PE conductor's cross-sectional area must be the same as the phase conductors' cross-sectional area. The connection terminals marked with ⏚ must be connected to the earth-current circuit.

> *NOTICE*
>
> The specified minimum PE conductor cross-sections (EN 61800-5-1) must be maintained.

If there are leakage currents greater than 3.5 mA, a reinforced earthing (PE) must be connected, as required by standard EN 61800-5-1. The cable cross-section must be at least 10 mm^2, or the earthing system must consist of two separately connected earthing cables.

→ Section 6.2, "Specific rated operational data", page 182 provides the leakage currents for the individual models.

→ Section 3.5, "EMC installation", page 69 goes over the EMC requirements for the motor cables.

A symmetrical, fully screened (360°), low-impedance motor cable must be used. The length of the motor cable depends on the RFI class and the environment.

For US installations, UL-listed cables (AWG) should be used exclusively. These cables must have a temperature rating of 70 °C (158 °F), and will often require installation inside a metal conduit (please consult the applicable local standards).

For the rated cable cross-sectional areas for DC1 variable frequency drives, please refer to → Section 6.4, "Cable cross-sections", page 192.

2.4 Safety and switching

2.4.1 Disconnecting device

→ Install a manual disconnecting device between the mains connection and the DC1 variable frequency drive. This disconnecting device must be designed in such a way that it can be interlocked in its open position for installation and maintenance work.

In the European Union, this disconnecting device must be one of the following devices in order to comply with European Directives as per standard EN 60204-1, "Safety of machinery":

- An AC-23B utilization category disconnector (EN 60947-3)
- A disconnector with an auxiliary contact that in all cases will disconnect the load circuit before the disconnector's main contacts open (EN 60947-3)
- A circuit-breaker designed to disconnect the circuit as per EN 60947-2

In all other regions, the applicable national and local safety regulations must be complied with.

2.4.2 Fuses

The DC1 variable frequency drive and the corresponding supply cables must be protected from thermal overload and short-circuits.

→ The fuse ratings and cable cross-sectional areas (wire gauges) for the connection on the mains side will depend on the DC1 variable frequency drive's input current I_{LN}.

→ For the recommended fuse sizing and assignments, please refer to → Section , "", page 193.

The fuses will protect the supply cable in the event of a short-circuit, limit any damage to the variable frequency drive, and prevent damage to upstream devices in the event of a short-circuit in the variable frequency drive.

2.4.3 Residual current circuit-breaker (RCD)

When using variable frequency drives (DC1-**3**…) that work with a three-phase power supply (L1, L2, L3), make sure to use type B AC/DC sensitive residual current devices exclusively.

When using variable frequency drives that work with a single-phase power supply (L, N) (DC1-**1**2… and DC1-1D…), you may use type A and type B residual current protective devices (RCD).

> *NOTICE*
>
> Residual current circuit-breakers (RCD = residual current device) should only be installed between the power feed system (the AC supply system supplying power) and the DC1 variable frequency drive – but not at the output to the motor!

The leakage currents' magnitude will generally depend on:

- length of the motor cable
- shielding of the motor cable
- height of the switching frequency (switching frequency of the inverter),
- design of the radio interference suppression filter
- grounding measures at the site of the motor.

Other protective measures against direct and indirect contact can be used for DC1 variable frequency drives, including isolating them from the supply system with the use of a transformer.

2.4.4 Overvoltage protection

If overvoltage are to be expected in the network or if normative specifications at the place of use require the same, an additional overvoltage protection must be implemented.

To comply with UL conformity, the surge protection must be installed on the mains side of the device. It must be designed for 480 V ("phase to ground") and 480 V ("phase to phase"), must also be suitable for overvoltage category III and have a protection level of 4 kV.

2.4.5 Mains contactors

The mains contactor enables an operational switching on and off of the supply voltage for the variable frequency drive and switching off in case of a fault. The mains contactor is designed based on the mains-side input current I_{LN} of the DC1 variable frequency drive for utilization category AC-1 (IEC 60947) and the ambient air temperature at the location of use.

→ While planning the project, please make sure that inching operation is not done via the mains contactor of the variable frequency drive on frequency-controlled drives, but through a controller input of the variable frequency drive.

The maximum permissible mains voltage switch-on frequency for the DC1 variable frequency drive is once every 30 seconds (normal operation).

→ For UL-compliant installation and during operation, the mains side switching devices must allow for a 1.25 times higher input current.

→ For the rated mains contactors for DC1 variable frequency drives, please refer to → Section 7.2, “Mains contactors“, page 197.

2.5 Mains chokes

Mains chokes reduce the total harmonic distortion, the mains feedback and improve the power factor. The apparent current on the mains side is then reduced by around 30 %.

Towards the variable frequency drive, the main chokes dampen the interference from the supply network. This increases the electric strength of the variable frequency drive and lengthens the lifespan (diodes of the mains power rectifier, internal DC link capacitors).

→ For the operation of the DC1 variable frequency drive, the application of main chokes is not necessary.

However, we recommend using a mains choke if the electrical supply system's quality is not known:

- Large voltage peaks (e.g., when switching large loads directly)
- Correction systems (without series inductors)
- Power supplied via conductor bar or slip ring systems (e.g., overhead cranes)

While planning the project, consider that a mains choke is only assigned to a single variable frequency drive for decoupling.

When using an adapting transformer (assigned to a single variable frequency drive), a main choke is not necessary.

Mains chokes are designed based on the mains-side input current (I_{LN}) of the variable frequency drive.

→ When the variable frequency drive is running at its rated current limit, the mains choke with a u_K value of around 4 % will cause the variable frequency drive's maximum possible output voltage U_2 to be reduced to about 96 % of the mains voltage U_{LN}.

→ For the rated mains contactors for DC1 variable frequency drives, please refer to → Section 7.2, "Mains contactors", page 197.

2.6 Radio interference suppression filter

DC1-12xxx**F**…, DC1-32xxx**F**…, and DC1-34xxx**F**… variable frequency drives feature an internal radio interference suppression filter. When combined with a motor cable that is screened and earthed 360° on both ends, they make it possible to comply with the stringent EMC limits for conducted interference corresponding to category C in the 1st environment (IEC/EN 61800-3).
This requires installation in accordance with EMC requirements, as well as not exceeding permissible motor cable lengths.

- 1 m for category C1 in the 1st environment (only DC1-12…),
- 5 m for category C2 in the 1st and 2nd environment,
- 25 m for category C3 in the 2nd environment.

→ DC1-32… and DC1-34… three-phase variable frequency drives can be operated within category C1 in the 1st environment only if an external radio interference suppression filter is used.

Longer motor cable lengths can be used if additional external radio interference suppression filters (DX-EMC…) are used.

→ For the rated radio interference suppression filters for DC1 variable frequency drives, please refer to → Section 7.4, "Radio interference suppression filter", page 202.

→ The unscreened cable length between the radio interference suppression filter and the variable frequency drive should not exceed 300 mm (maximum of 500 mm depending on the setup inside the metal-enclosed control panel).

Additional measures used to reduce EMC limits and use longer motor cable lengths are possible in combination with motor chokes and sine filters.

→ In the case of power drive systems (PDS) with variable frequency drives, electromagnetic compatibility (EMC) measures must already be taken into account during the engineering stage, as making changes during assembly and installation and retroactively fixing things will be more expensive.

2.7 Braking resistances

In certain operating states, the motor may run as a generator in certain applications (regenerative braking operation).

Examples include:

- Lowering in hoisting gear and conveyor applications,
- Controlled speed reduction in the case of large load inertias (flywheels),
- A fast speed reduction in dynamic travel drives.

When the motor operates as a generator, its braking energy will be fed into the variable frequency drive's DC link via the inverter. DC link voltage U_{DC} will be increased as a result. If the voltage value is too high, the DA1 variable frequency drive will disable its inverter, after which the motor will coast uncontrolled.
If there is a braking chopper and a connected braking resistance R_B, the braking energy fed back into the variable frequency drive can be dissipated in order to limit the DC link voltage.

DC1-…B-A… variable frequency drives (frame sizes FS2, FS3, and FS4) feature an integrated braking chopper. The brake resistors are connected to the internal braking transistor with terminals DC+ and BR so that they will be connected in parallel to the DC link. In addition to this, the braking chopper must be enabled using parameter P-34 (= 1 or = 2).
The braking chopper will be switched on automatically if the braking energy being fed back causes the DC link voltage to increase to the switch-on voltage's magnitude.

Device series	Mains connection	Voltage class	Braking chopper on	Braking chopper off
DC1-12…	Single-phase	230 V	390 V	378 V
DC1-32…	Three-phase	230 V	390 V	378 V
DC1-34…	Three-phase	400 V	780 V	756 V

For example, in the case of DC1-34… variable frequency drives, the braking chopper will be switched on at a DC link voltage of approximately 780 V DC and then back off at 756 V DC. During this stage, the braking transistor and the brake resistor will be active continuously.

In the case of units with a frame size of FS2 or FS3, brake resistor DX-BR3-100 (P_D = 200 W) can be inserted underneath the heat sink. In addition, parameter P-34 must be set to a value of 1 in order to protect against thermal overloads (braking chopper activated with electronic overload protection).

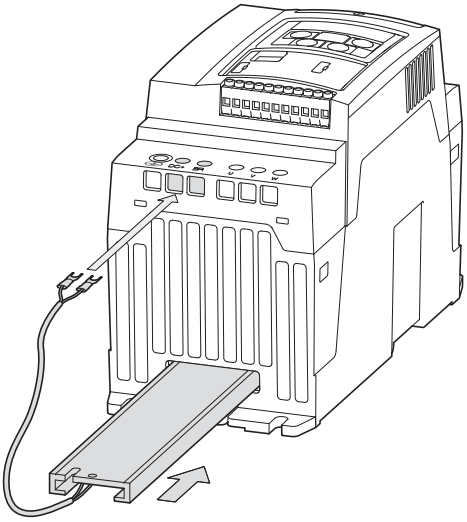

Figure 15: DC1 variable frequency drive with a frame size of FS2 and a DX-BR3-100 brake resistor

It is often difficult to specify a suitable brake resistor for specific applications. This is due to the fact that not all of the application conditions required for sizing will be available when the engineering stage starts. Because of this, and as a simplification, brake resistors are instead usually classified for two load groups:

- **Low duty**: Low load with short braking duration and low duty factor (up to about 25 %), e.g., for horizontal conveyors and handling equipment for bulk cargo and general cargo, end carriages, sliding doors, and turbomachinery (centrifugal pumps, fans).
- **High duty**: High load with long braking duration and high duty factor (at least 30 %), e.g., for elevators, downhill conveyors, winders, centrifuges, flywheel motors, and large fans.

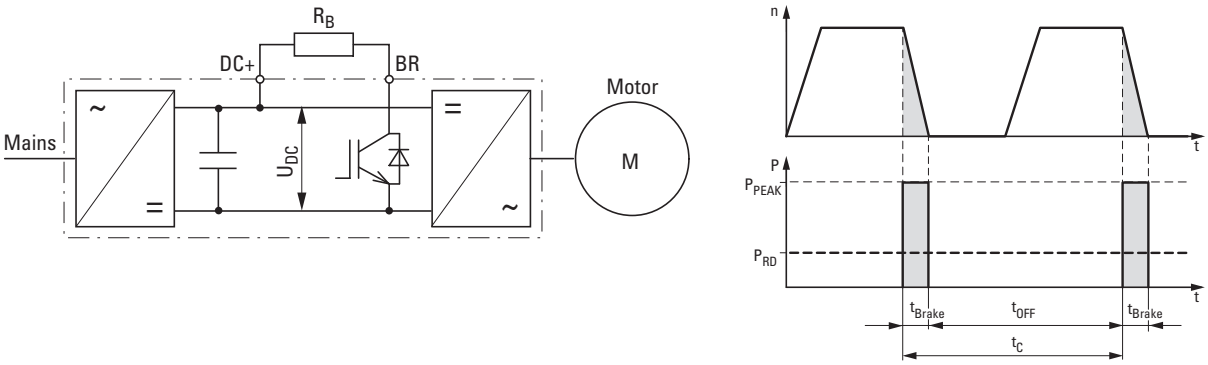

Figure 16: Braking cycle, fast motor stop with external brake resistor

Selecting brake resistors

Brake resistors are selected based on continuous power dissipation P_{DB} and maximum peak pulse power P_{Peak}.
The brake resistor must be adequate for both powers.

The maximum pulse power is defined by the braking torque – kinetic energy W_{kin} during braking – that is fed back by the motor during braking.
A simplified method that can be used is to take the variable frequency drive's braking power P_{max} or the rated motor output and use it as peak pulse power P_{Peak} for sizing purposes, since the mechanical braking power will be reduced by the motor's and inverter's efficiency.

$$P_{Peak} \sim P_{max} = \frac{1}{2} \times \frac{W_{kin}}{t_{Braking}}$$

The required rated power / continuous rating for braking resistance P_{DB} is calculated using braking energy W_{kin} and cycle time t_C:

$$P_{DB} = \frac{W_{kin}}{t_C}$$

If the kinetic energy is not known, you will need the ratio of braking time $t_{Braking}$ to cycle time t_C:

$$DF[\%] = \frac{t_{Braking}}{t_C} \times 100\ \%$$

The required continuous rating for a duty factor of 10% (= DF[%]), for example, can be calculated as follows:

$$P_{DB} = P_{Peak} \times 10\ \%$$

This means that the brake resistor's continuous rating P_{DB} will always be lower than maximum pulse power P_{Peak} by the DF[%] factor.

Resistance R_B must be at least as high as the breaking transistor's minimum permissible resistance R_{min}.

→ Use brake resistors with the recommended R_{Brake} resistance values for the DC1 variable frequency drives' ratings.

→ For the rated braking resistances for DC1 variable frequency drives, please refer to → Section 7.5, "Braking resistances", page 206.

2.8 Motor chokes

It is recommended to use a motor choke if using long cable lengths and/or connecting several motors in parallel. The motor reactor is in the output of the variable frequency drive. Its rated operational current must always be greater than/equal to the rated operational current of variable frequency drive.

For DC1 variable frequency drives, it is recommended to use a motor choke for motor cable lengths of 100 meters or more.

Doing so may result in the following improvements:

- Longer maximum permissible screened motor cable length, up to 200 m,
- Current smoothing and du/dt value (kV/µs) attenuation, providing additional protection for the winding insulation inside the motor,
- Motor noise and heat build-up will be reduced.

→ Take into account the maximum permissible motor cable lengths for the relevant EMC interference category.

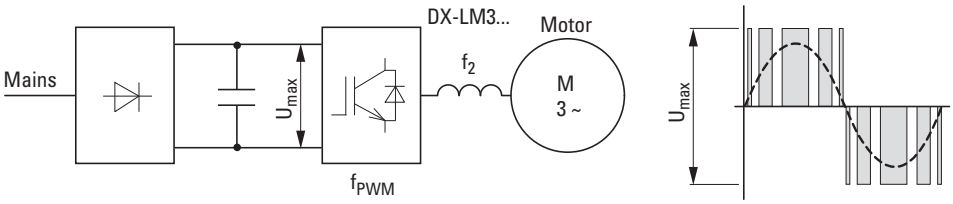

Figure 17: DX-LM3… rated operational data:
U_{max} = 750 V, f_2 = 0 - 400 Hz, f_{PWM} = 8 - 32 kHz (P-17 setting on DC1)

It is also recommended to use a motor choke at the variable frequency drive's output if several motors with identical or different rated operational data are being run in parallel (V/Hz control only). In this case, the motor choke will compensate for the total resistance and total inductance decreases caused by the parallel circuit and will attenuate the cables' higher stray capacitance.

→ For the rated motor chokes for DC1 variable frequency drives, please refer to → Section 7.6, "Motor chokes", page 210.

→ For more information and technical data on DX-LM3… motor chokes, please refer to instruction leaflet IL00906003Z.

2.9 Sine filter

Sine filters are connected between a variable frequency drive's output and the motor. The voltage output by a sine filter will be virtually sinusoidal, ensuring that:

- Conducted and radiated emissions will be reduced (EMC),
- Irritating noise levels and motor losses will be reduced,
- Potential insulation damage will be minimized, extending the motor's life as a result.

→ Sine filters require for the variable frequency drive to modulate the output voltage with V/Hz control.
In order to meet this requirement, parameter P-60 on DC1-…E1 variable frequency drives needs to be set to a value of 1 (this is the default setting).

→ When there is a load-dependent or thermal overload, DC1 variable frequency drives will automatically reduce the carrier frequency (f_{PWM}) to a minimum value of 8 kHz (double modulation, effective rms value of 4 kHz).

→ When used with a DX-SIN3… sine filter, the minimum permissible carrier frequency (f_{PWM}) on the DC1 variable frequency drive must be set to 8 kHz using parameter P-17.

→ For the rated sine filters DX-SIN3… for DC1 variable frequency drives, please refer to the technical data chapter in
→ Section 7.7, "Sine filter", page 212.

2.10 Switching to the output side

Typical applications for switching at the DC1 variable frequency drive's output include:

- Cases in which a bypass circuit is implemented.
- Cases in which it must be possible to switch on various motors as necessary.
- Cases in which several motors are connected in parallel and need to be switched individually.
- Cases in which the motor must be de-energized quickly in the event of an emergency switching off (safety shutdown).

When an individual motor is switched off, the inverter needs to be disabled first (the FWD/REV enable signal must be switched off) before the contacts (contactor, switch-disconnector) on the variable frequency drive's output side are opened.

> *NOTICE*
>
> Switching off during operation in vector mode (P-60 = 0 / 2 / 3 / 4) is not permissible and may result in damage to the switching device and the variable frequency drive.

In cases in which the output is switched to a running motor, parameter P-33 must have a value of 1 (flying restart circuit enabled). When this condition is met, the DC1 variable frequency drive will be automatically synchronized with the running motor with the enable signal (FWD/REV).

2.10.1 Contactors

The contactors on the output side of DC1 variable frequency drives need to be sized based on utilization category AC-3 (IEC/EN 60947-4-1) for the assigned rated motor current and the corresponding rated operating voltage.

When a motor is being switched off, the DC1 variable frequency drive's output (inverter) must be disabled (the FWD/REV enable signal must be switched off) before the contacts are opened.

> *NOTICE*
>
> Switching off during operation in vector mode (P-60 = 0 / 2 / 3 / 4) is not permissible and may result in damage to the contactor and the variable frequency drive.

→ Vacuum contactors should not be used at a variable frequency drive's output, as they are not suitable for switching at low frequencies.

2.10.2 Switch-disconnectors

Switch-disconnectors are used as repair and maintenance switches in industrial, trade, and building service management applications. At the output of variable frequency drives, they are primarily used to locally switch off motors (pumps, fans) that pose a risk of unintended starting during maintenance or repairs. In order to provide greater safety, these switch-disconnectors can be locked out with the use of padlocks, meaning they have characteristics comparable to those of main switches as defined in EN 60204.

Eaton T0…/MSB/…, P1…/MSB/…, and P3…/MSB/… enclosed switch-disconnectors are designed for local installation with an IP65 degree of protection. The internal screening plate ensures that screened motor cables can be easily connected in a way that meets EMC requirements.

For more information and technical data on T0…/MSB/…, P1…/MSB/…, and P3…/MSB/… switch-disconnectors, please refer to instruction leaflets IL008020ZU and IL008037ZU.

The switch-disconnectors on the output side of DC1 variable frequency drives need to be sized based on utilization category AC-23A (IEC/EN 60947-3) for the assigned rated motor current and the corresponding rated operating voltage.

When a motor is being switched off, the DC1 variable frequency drive's output (inverter) must be disabled (the FWD/REV enable signal must be switched off) before the contacts are opened.

NOTICE

Switching off during operation in vector mode (P-60 = 0 / 2 / 3 / 4) is not permissible and may result in damage to the switch-disconnector and the variable frequency drive.

2.10.3 Bypass circuit

WARNING

Never connect the DC1 variable frequency drive's output terminals U, V, and W to the power feed system (L1, L2, L3). Connecting the mains voltage to the output terminals can result in the variable frequency drive being irreparably damaged.

If a bypass is required, use mechanically linked switches or contactors or electrically interlocked contactors in order to ensure that the motor terminals will not be simultaneously connected to the mains connection and to the variable frequency drive's output terminals.

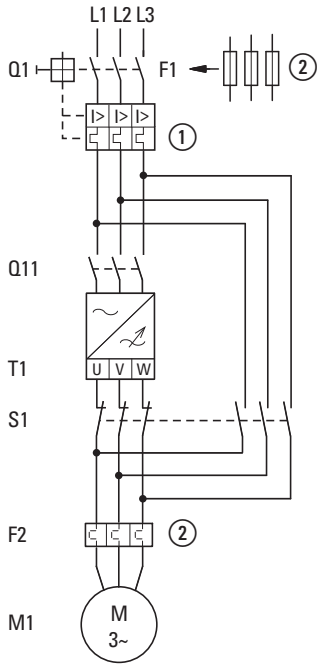

① Q1 thermal overload and short-circuit protection
② F1 fuse and F2 overload relay (alternative to ①)
Q1 Mains contactor
T1 DC1 variable frequency drive
S1 Interlocked switching between variable frequency drive and bypass
F2 Motor protection (overload relay, alternative to ①)
M1 Three-phase motor

Figure 18: Bypass motor control (example)

When the motor is being switched off, the output (U, V, W) of variable frequency drive T1 must be disabled (the FWD/REV enable signal must be switched off) before the contacts at S1 are opened.

NOTICE

Switching off during operation in vector mode (P-60 = 0 / 2 / 3 / 4) is not permissible and may result in damage to the switching device and the variable frequency drive.

2.10.4 Connecting Motors in Parallel

→ If multiple motors are connected in parallel, the total of their motor currents must be lower than the DC1 variable frequency drive's rated operational current.

Connecting motors in parallel will reduce the load resistance at the variable frequency drive's output. This will cause the total stator inductance to decrease and the cables' stray capacitance to increase, resulting in greater harmonic distortion when compared to a single-motor circuit.
In order to reduce the amount of current distortion, it is recommended to use a motor choke or a sine filter at the variable frequency drive's output when there are three motors or more.

→ When running multiple motors in parallel with a single variable frequency drive, the individual motors' outputs should not be more than three output classes apart.

→ If several motors are being run in parallel, you will not be able to use the variable frequency drive's electronic motor protection. As a result, each individual motor must be protected with thermistors and/or an overload relay.Within a frequency range of 20 to 120 Hz, the PKE electronic motor-protective circuit-breaker can be used for motor protection at a DC1 variable frequency drive's output as well.

NOTICE

If multiple motors are being run simultaneously using a single variable frequency drive, make sure to size the individual motors' contactors as required for utilization category AC-3. The motor contactors must be selected according to the rated operational currents of the motors that will be connected.

→ The total of the motor currents in operation, plus, for example, the inrush current of a motor being added, must be less than the rated operational current of the variable frequency drive.

In applications with motors that will be connected and disconnected, we recommend using a motor choke or a sine filter.

→ Connecting multiple motors in parallel requires for the variable frequency drive to modulate the output voltage with V/Hz control. In order to meet this requirement, parameter P-60 on DC1-…E1 variable frequency drives needs to be set to a value of 1 (= default setting).

→ When using vector mode (P-60 = 0), two motors with identical output classes can be connected (e.g., calendar drive).

→ When using vector mode with P-60 = 2, 3 or 4, it is not permissible to run multiple motors connected in parallel!

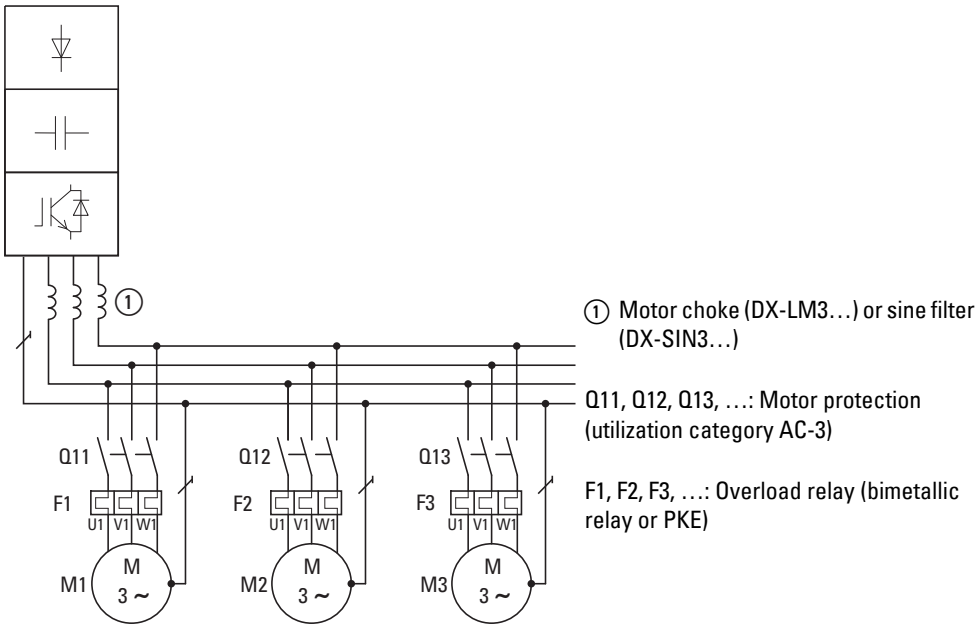

Figure 19: Example: Parallel connection of several motors to one variable frequency drive

2.11 Three-phase motors

DC1-…E1 variable frequency drives can be used to drive the following three-phase AC motors with sensorless control:

- Three-phase asynchronous motor (DAM),
- Permanent magnet motor (PM),
- Brushless DC motors (BLDC),
- Synchronous reluctance motor (SynRM).

When used with their default settings, DC1-…E1 variable frequency drives are configured for V/Hz modulation for the rated motor output of a three-phase asynchronous motor, i.e., this is the intended application for "out-of-the-box operation" without configuring any parameters.

→ Vector mode, as well as running PM, BLDC, or SyncRM motors, will need for parameters P-60 and P-61 on DC1 variable frequency drives to be configured accordingly.

2.11.1 Motor Selection

→ Check whether the DC1 variable frequency drive you selected and the AC motor you will be using are compatible with each other as per the corresponding voltage (mains and motor voltage) and rated operational current.

Configurations such as the ones used in outrunner motors and slip-ring motors also fall under the three-phase asynchronous motor category (which in turn is also referred to as the "squirrel-cage rotor" or "standard motor" category). These motors can also be run with DC1 variable frequency drives, but will normally require additional engineering, modifying the various parameters, and detailed information from the motor manufacturer.

General recommendations for motor selection:

- Only use motors that have insulation class F (maximum steady state temperature of 155 °C) at least.
- Choose 4 pole motors preferably (synchronous speed: 1500 min^{-1} at 50 Hz and 1800 min^{-1} at 60 Hz).
- Take the operating conditions into account for S1 operation (IEC 60034-1).
- Do not oversize the motor, i.e., the motor should not be more than one rating level higher than the rated motor output.
- In the case of undersized motors, the motor output for continuous operation should not be more than one rating level lower than the rated rating level (in order to ensure that the motor will be protected).
- When running tests or commissioning a system with significantly lower motor outputs, the motor's rated operational current must be adjusted using parameter P-08 ("rated motor current").

2.11.2 Circuit types with three-phase motors

A three-phase motor's stator winding can be connected in a star connection or delta circuit as per the mains voltage (U_{LN} = output voltage U_2) and the rated operational data on the motor's nameplate (rating plate).

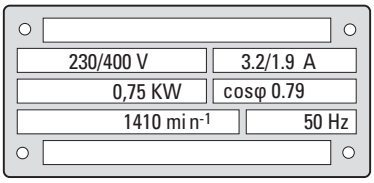

Figure 20: Example of a nameplate (rating plate) for a three-phase asynchronous motor

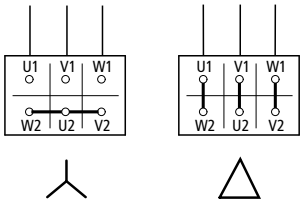

Figure 21: Configuration types: Star-connected circuit (left), Delta circuit (right)

Examples based on figures 20 and 21

Motor in star connection,
mains voltage: three-phase 400 V; output voltage: three-phase 400 V

→ DC1-342D2…

Motor in delta circuit,
mains voltage: single-phase 230 V; output voltage: three-phase 230 V

→ DC1-124D3…

Motor connection

DC1 variable frequency drive	according to IEC	according to UL
U	U1 (-U2)	T1 (-T4)
V	V1 (-V2)	T2 (-T5)
W	W1 (-W2)	T3 (-T6)

2.11.3 Permanent magnet motor (PM motor)

PM motors are three-phase motors that are excited by permanent magnets and have a speed that is directly proportional to the supply frequency. Together with a high-pole-count, three-phase stator winding, the permanent magnets on the rotor make it possible to produce large torques at low speeds, which in turn makes it possible to forgo the use of a gearbox in many applications.

By combining high efficiency and good power factor characteristics with a lightweight and compact construction, PM motors make for a compelling choice when compared to asynchronous motors. Accordingly, these high-efficiency motors are primarily found in roller and press drives, agitator and mill drives, drives for extruder screws, and drives used by the crane industry for a variety of applications.

→ In order to use vector control with permanent magnet motors, the values for parameters P-60, P-61, and P-62 on DC1 variable frequency drives need to be changed:

- Change the value for P-60 to 2 (“PM motor speed control”).
- Change the value for P-61 to 1 (“Motor identification”). Automatic autotune to determine the motor parameters when the motor is stationary.
- P-62 (“MSC gain”). Adjust the gain factor for the speed controller.

2.11.4 Brushless DC motor (BLDC motor)

Contrary to what their name might seem to imply, brushless DC motors (BLDC, also referred to as “EC motors”) do not have the same configuration as a DC motor, but are instead put together the same way as three-phase synchronous motors. The three-phase AC field coil in brushless DC motors generates a rotating magnetic field that pulls the permanently excited rotor along. When using vector control, the rotor position is determined based on the back-EMF generated in the stator’s coils. This means that the variable frequency drive’s output voltage must always be live in all three phases (block voltage control), even when the rotor is stationary. If this condition is met, short current pulses will be generated when the system is stationary – these pulses will not move the motor, but they will have an effect on the rotor’s magnetic field.

The control response for BLDC motors is to a large extent the same as that for a shunt DC motor. BLDC motors are primarily used in drive systems for machine tools, servo drives in conveyor systems, and compressors and metering pumps.

In order to use vector control with brushless DC motors, the values for parameters P-60, P-61, and P-62 on DC1 variable frequency drives need to be changed:

- Change the value for P-60 to 3 ("Brushless DC motor speed control").
- Change the value for P-61 to 1 ("Motor identification"). Automatic autotune to determine the motor parameters when the motor is stationary.
- P-62 ("MSC gain"). Adjust the gain factor for the speed controller.

2.11.5 Synchronous reluctance motor (SynRM)

Synchronous reluctance motors have the same configuration as a three-phase asynchronous motor. In order to prevent eddy currents, their rotor is made of a soft magnetic material such as electrical steel, and in general terms can have one of two different sheet cross-sections.

In the case of reluctance motors intended to be run as grid-connected systems, the rotor additionally features a rotor cage (similar to that used in asynchronous motors). This cage makes it possible for the motor to start asynchronously on the grid until it synchronizes ("falls into step") to it and is able to follow the rotating field.

In the case of reluctance motors with a rotor that features salient poles with flux directing sections and flux barrier sections, a variable frequency drive with sensorless vector control is required (DC1-…E1). This combination makes it possible to have a rotor speed that is synchronous with the rotating field and achieve optimum operation even when there are load changes. The losses in the rotor will be practically negligible within this context. Synchronous reluctance motors have better efficiency than conventional asynchronous motors and, in contrast to them, can meet the requirements for the IE4 international efficiency class. Synchronous reluctance motors are primarily used in turbomachinery (rotating equipment) in process engineering, where they are used to drive pumps, fans, compressors, and turbines, as well as mixers, centrifuges, and conveyor systems.

In order to use vector control with synchronous reluctance motors, the values for parameters P-60, P-61, and P-62 on DC1 variable frequency drives need to be changed:

- Change the value for P-60 to 4 ("SyncRel motor speed control").
- Change the value for P-61 to 1 ("Motor identification"). Automatic autotune to determine the motor parameters when the motor is stationary.
- P-62 ("MSC gain"). Adjust the gain factor for the speed controller.

2.11.6 Single-phase AC motors

It is strictly prohibited to use the DC1 variable frequency drives described in this manual to run single-phase AC motors (induction motors), single-phase asynchronous motors (capacitor motors), shaded-pole motors, etc.

There are other DC1 variable frequency drive models designed for use with these motors: DC1-S1… and DC1-S2… with IP20 and IP66 degrees of protection.

→ For more information on how to run single-phase AC motors using the DC1 variable frequency drive, please refer to manual MN040058EN, "DC1-S…20… and DC1-S…OE1 Variable Frequency Drives – Installation and Parameter Manual"

This manual is available on the Eaton website at:

eaton.com/documentation

In the **Quick Search** box, enter "MN040058EN".
Then click on **Search**.

2.11.7 Connecting Ex motors

The following aspects must be taken into account when connecting hazardous location motors:

- A DC1 variable frequency drive can be installed in an explosion-proof enclosure within the hazardous location or in a control panel outside the hazardous location.
- All applicable industry-specific and country-specific regulations for hazardous locations (ATEX 100a) must be complied with.
- The specifications and instructions provided by the motor's manufacturer with regard to operation with a variable frequency drive – e.g., whether motor reactors (dV/dt limiting) or sine filters are required – must be taken into account.
- Temperature sensors in the motor windings (thermistor, Thermo-Click) must not be connected directly to the variable frequency drive, but instead must be connected through a relay approved for the hazardous location (e.g. EMT6).

3 Installation

3.1 Introduction

This chapter provides a description of the installation and the electrical connections for the variable frequency drive DC 1 series.

→ While installing and/or assembling the variable frequency drive, cover all ventilation slots in order to ensure that no foreign bodies can enter the device.

→ Perform all installation work with the specified tools and without the use of excessive force.

→ For more information on how to install DC1 variable frequency drives with the various available degrees of protection and frame sizes, please refer to the following instruction leaflets:
- IL04020009Z (IP20 in FS1, FS2, FS3)
- IL04020024ZU (IP20 in FS4)
- IL04020059ZU (IP66 in FS1, FS2, FS3, FS4, Coated Board, Outdoor Enhanced)

3.2 Mounting position

DC1-…CE1 and DC1-...OE1 variable frequency drives have a conformal coating on their printed circuit boards (coated boards) that provides enhanced protection from moisture and soiling.
DC1 variable frequency drives are available with two enclosure versions:

- IP20/NEMA 0 degree of protection: for use in control panels.
- IP66/NEMA 4X protection type: This enclosure version protects against moisture and dust and is designed for use in harsh conditions.
  The devices DC1-...OE1 in protection class IP66 additionally have an "Outdoor Rating". This ensures a high UV resistance, so that they can be used outdoors without a roof.

Without the required additional measures, using the device in the following environments is strictly prohibited:

- Explosion-proof Ranges
- Environments with damaging substances:
  - Oils and acids
  - Gases and fumes
  - Dust
  - Radiated noise
- Environments with mechanical vibration and impact loads that go beyond the requirements in EN 50178.
- Areas in which the variable frequency drive takes care of safety functions that must guarantee machine and personnel protection.

3.3 Mounting

The engineering instructions in this section are meant to show how to install the device in a suitable enclosure for devices with degree of protection IP20 in compliance with standard EN 60529 and/or any other applicable local regulations.

- The enclosures must be made of a material with high thermal conductivity.
- If a control panel with ventilation openings is used, the openings must be located above and below the variable frequency drive in order to allow for proper air circulation. Air should be delivered from the bottom and conveyed outwards through the top.
- If the environment outside the control panel contains dirt particles (e.g., dust), a suitable particle filter must be placed on the ventilation openings and forced ventilation must be used.The filters must be maintained and cleaned if necessary.
- An appropriate enclosed control panel (without ventilation openings) must be used in environments containing large percentages or amounts of humidity, salt, or chemicals.

→ Install the DC1 variable frequency drive only on a nonflammable mounting base (e.g., on a metal plate).

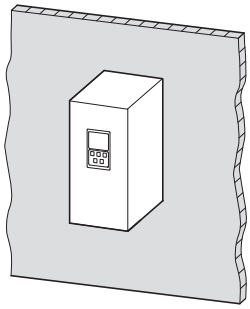

Figure 22: Surface mounting on metal plate

IP66 DC1 variable frequency drives must be installed as required by the local conditions for this degree of protection.

3.3.1 Mounting position

DC1 series variable frequency drives are designed to be mounted vertically. The maximum permissible inclination is 30°.

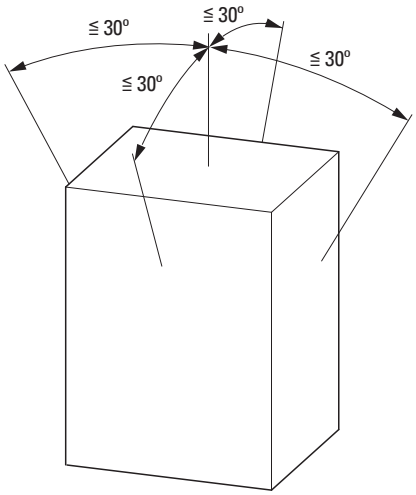

Figure 23: Mounting position

3.3.2 Cooling measures

To ensure that there is sufficient air circulation, appropriate thermal clearances must be maintained, with these clearances depending on the size of the specific variable frequency drive.

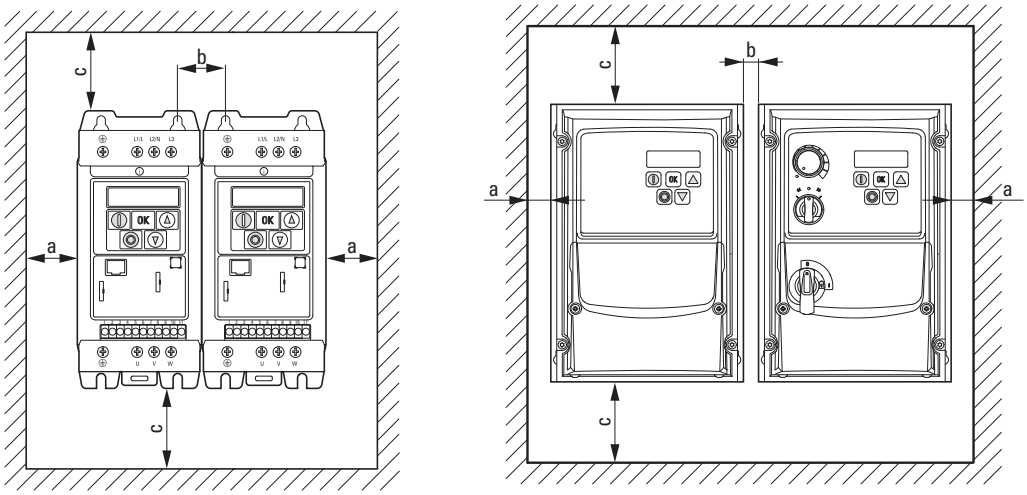

Figure 24: Clearances for air cooling (left: IP20; right: IP66)

→ The variable frequency drives with IP20 degree of protection can be mounted side by side without any lateral clearance between them.

When variable frequency drives with internal fans are installed vertically over each other, an air baffle must be placed between the devices. Failure to do so may expose the device on top to a thermal overload caused by the guided air flow (device fan).

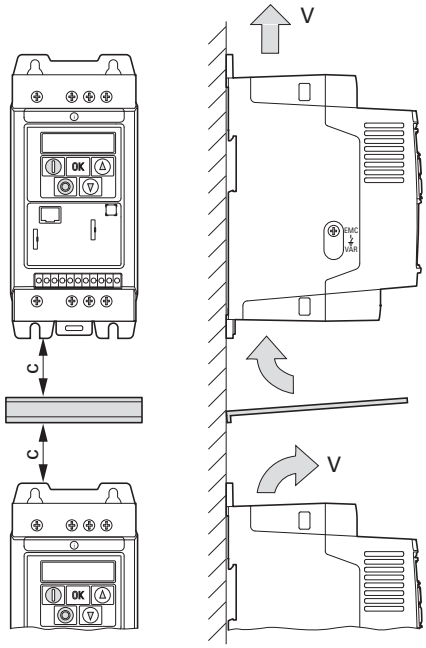

Figure 25: Deflector due to increased circulation caused by device fan

→ Devices with high magnetic fields (e. g. reactors or transformers) should not be installed close to the variable frequency drive.

Table 3: Recommended values for minimum clearances (→ Figure 24)

Size	a		b		c	
	mm	in	mm	in	mm	in
For degree of protection IP20						
FS1	50	1,97	33	1,3	50	1,97
FS2	50	1,97	46	1,81	75	2,95
FS3	50	1,97	52	2,05	100	3,94
FS4	50	1,97	52	2,05	100	3,94
For degree of protection IP66						
FS1	10	0,39	10	0,39	200	7,87
FS2	10	0,39	10	0,39	200	7,87
FS3	10	0,39	10	0,39	200	7,87
FS4	10	0,39	10	0,39	200	7,87

The values specified in → Table 3 are recommended values for an ambient temperature of up to +50 °C with an IP20 degree of protection or +40 °C with an IP66 degree of protection, an installation altitude of up to 1000 m, and a switching frequency of up to 8 kHz.

→ Typical heat loss makes up about 3 % of the operational load conditions.

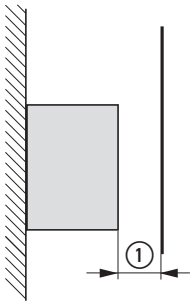

Size with IP20 degree of protection	Minimum clearance 1
FS1, …, FS4	≧ 15 mm (≧ 0.59 inch)
FS1, …, FS4 with DX-NET-SWD3 and SWD4-8SF2-5	≧ 50 mm (≧ 1.97 inch)

Figure 26: Minimum required clearance 1 in front of the variable frequency drive when installed in an enclosure (control panel)

3.3.3 Fixing

All DC1 variable frequency drive frame sizes can be mounted with screws. Moreover, frame sizes FS1 to FS3 with an IP20 degree of protection can be mounted on a mounting rail as well.

→ Dimension and weight specifications for the DC1 variable frequency drive can be found in the
→ Section 6.3, “Dimensions“, page 189.

3.3.3.1 Fixing with screws

→ Use screws with a washer and split washer with the permissible tightening torque in order to protect the enclosure and safely and reliably mount the device.

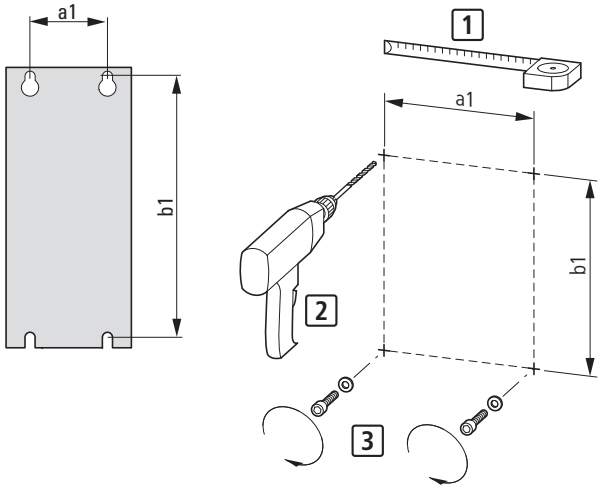

Figure 27: Mounting dimensions

▶ First fit the screws at the specified positions, mount the variable frequency drive and then fully tighten all screws.

Table 4: Installation dimensions, screws, tightening torques

Size	Degree of protection		a1		b1		Screw		Tightening torque	
FS	IP	NEMA	mm	in	mm	in	Quantity	Size	N/m	lb-in
FS1	IP20	NEMA 0	50	1.97	170	6.69	4	M4	1	8.85
FS1	IP66_x	NEMA 4X	184.5	5.85	189	7.44	4	M4	1	10.62 - 13.27
FS2	IP20	NEMA 0	75	2.95	215	8.46	4	M4	1	8.85
FS2	IP66_x	NEMA 4X	176	6.93	200	7.87	4	M4	1	10.62 - 13.27
FS3	IP20	NEMA 0	100	3.94	255	10.04	4	M4	1	8.85
FS3	IP66_x	NEMA 4X	198	7.78	252	9.9	4	M4	1	10.62 - 13.27
FS4	IP20	NEMA 0	125	4.92	400	15.75	4	M6	4	35.4
FS4	IP66	NEMA 4X	226	8.90	300	11.82	4	M4	1	8.85

1 in = 1'' = 25.4 mm; 1 mm = 0.0394 in

3.3.3.2 Fixing on a mounting rail

As an alternative to screw fixing, DC1 variable frequency drives with sizes FS1, FS2 and FS3 and a degree of protection of IP20 can also be mounted on a mounting rail as per IEC/EN 60715.

→ If you use EMC mounting adapters (DX-EMC-MNT-…), use a tall mounting rail (15 mm) preferably.

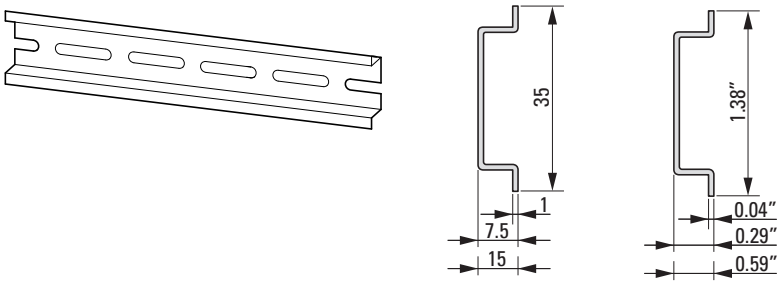

Figure 28: Mounting rail conforming with IEC/EN 60715

→ If you use EMC mounting adapters (DX-EMC-MNT-…), use a tall mounting rail (15 mm) preferably.

▶ To do this, place the variable frequency drive on the mounting rail from above [1] and press it down until it snaps into place [2].

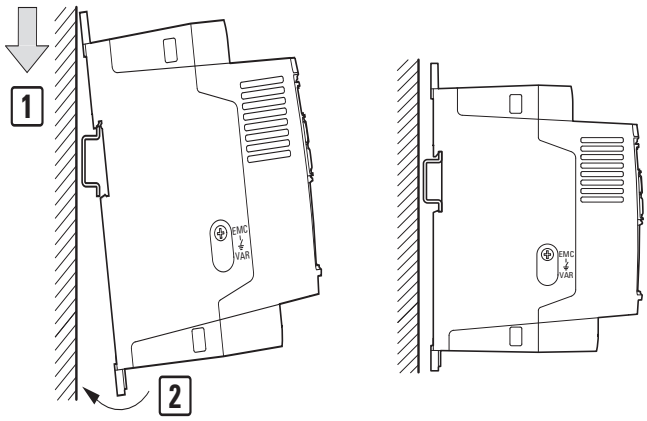

Figure 29: Fixing on a mounting rail

Dismantling from mounting rails

▶ To remove the device, push down the spring-loaded clip. A cutout marked on the lower edge of the device is provided for this purpose. A flat-bladed screwdriver (blade width 5 mm) is recommended for pushing down the clip.

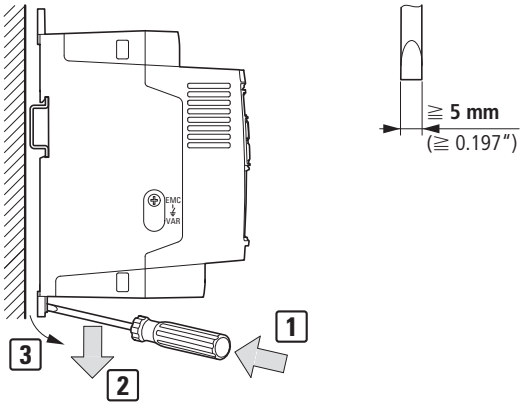

Figure 30: Dismantling from mounting rails

3.4 IP66/NEMA4X degree of protection

IP66 DC1 variable frequency drives are available in two versions:

- DC1-…-A66: Activation via control signal terminals
- DC1-…-A6S: Controlled with controls on the front and/or control signal terminals

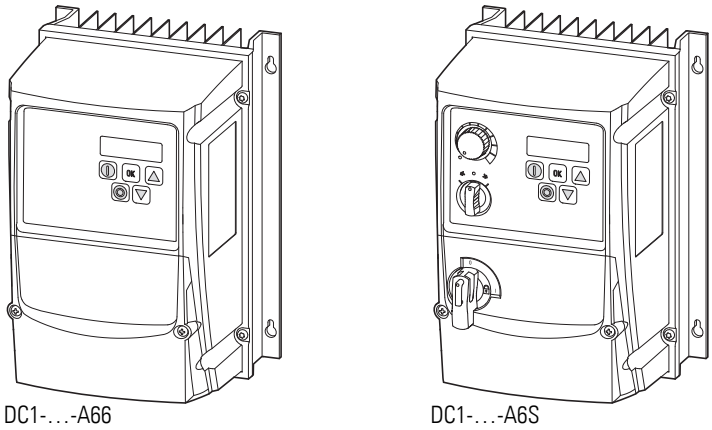

Figure 31: IP66 variants

The units must be mounted, with four screws and in a vertical position, on a wall or panel that is made of nonflammable material and is stable enough to hold the variable frequency drive's weight.

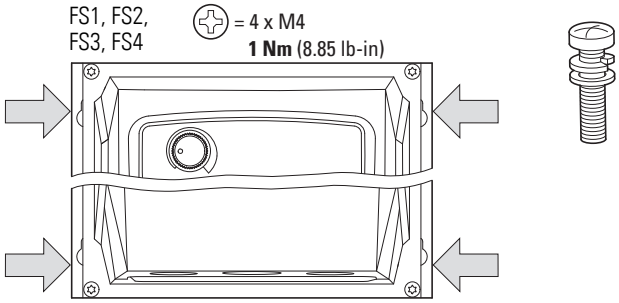

Figure 32: Openings for fixing screws

On the DC1-…-A6S version, the main disconnect switch can be locked in the OFF position with a standard padlock.

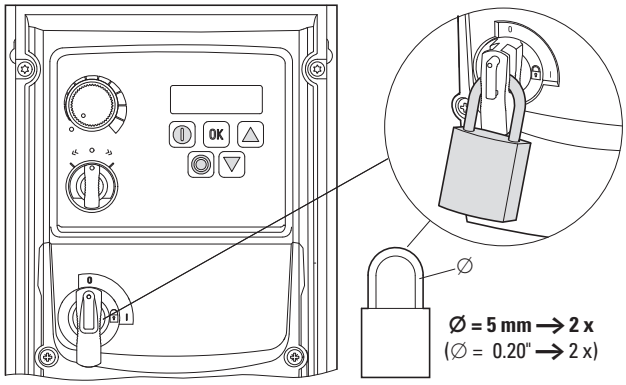

Figure 33: DC1-…-A6S with padlock

▶ Push on the center of the switch in order to open the opening for the padlock.

3.5 EMC installation

The responsibility to comply with the legally stipulated limit values and thus the provision of electromagnetic compatibility is the responsibility of the end user or system operator. The operator must also take measures to minimize or remove emission in the environment concerned. He must also utilize means to increase the interference immunity of the devices of the system.

→ In a drive system (PDS) with variable frequency drives, you should take measures for electromagnetic compatibility (EMC) while doing your engineering, since changes or improvements to the installation site, which are required in the installation or while mounting, are normally associated with additional higher costs as well.

The technology and system of a variable frequency drive cause the flow of high frequency leakage current during operation. Because of this, all earthing elements must be low-impedance elements connected in such a way as to establish an electrical contact across a large surface area.

With leakage currents greater than 3.5 mA, in accordance with VDE 0160 or EN 60335, either

- the cable cross-section of the protective conductor must be ≧ 10 mm^2,
- the protective conductor must be open-circuit monitored, or
- the second protective conductor must be fitted.

For an EMC-compliant installation, we recommend the following measures:

- installation of the variable frequency drive in a metallically conductive housing with a good connection to ground,
- screened motor cables (short cables).

→ Ground all conductive components and housings in a drive system using as short a line as possible with the greatest possible cross-section (Cu-braid).

3.5.1 EMC measures in the control panel

In order to have an installation that meets EMC requirements, make sure to connect all the metallic parts in the devices and in the control panel to each other across a large area and in a way that will make it possible to conduct high frequencies. Mounting plates and control panel doors should be connected to the panel by means of short drain wires with an electrical contact established across a large surface area.

→ Do not make connections to painted surfaces (electrolytic oxidation, yellow chromated).

→ Install the variable frequency drive as directly as possible (without spacers) on a metal plate (mounting plate).

→ Route mains and motor cables in the control cabinet as close to the ground potential as possible. This is because free moving cables act as antennas.

→ If routed in parallel, cables carrying high frequencies (e.g., screened motor cables) and clean cables (e.g., mains supply cable, control and signal cables) should be installed at a distance of at least 100 mm from each other in order to avoid electromagnetic interference. You should also use separate cable entries if there is a great difference in voltage potentials. If control cables and power cables need to cross, they should always do so at a right angle (90°).

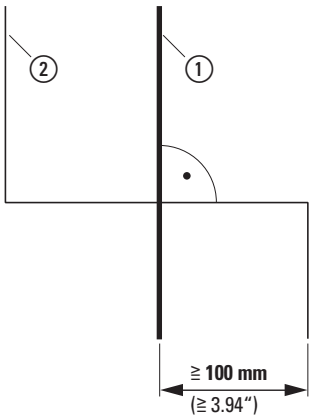

Figure 34: Cable routing

→ Do not route the control and signal cables ② in the same conduit as the power cables ①.
Analog signal cables (measured values, setpoints, and correction values) must be routed inside screened conduit.

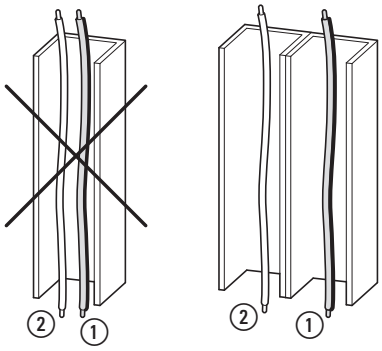

Figure 35: Separate routing

① Power cable: mains voltage, motor connection
② Control and signal lines, fieldbus connections

3.5.2 Earthing

The protective earth (PE) in the control panel should be connected from the mains supply to a central earth point (mounting plate, system earth). The PE conductor's cross-sectional area must be at least as large as that of the incoming mains supply cable. For mobile equipment, the cross-section of the PE conductor must be at least 10 mm^2 for leakage currents greater than 3.5 mA.

Every variable frequency drive must be individually connected to the power supply system's protective earth directly at the location of installation (system earthing). This protective earth must not pass through any other devices.

All protective conductors should be routed in a star topology starting from the central earth point, and all of the magnet system's conductive components (e.g. variable frequency drive, sine filter) should be connected.

The earth-fault loop impedance must comply with all locally applicable industrial safety regulations. In order to meet UL requirements, UL-listed ring cable lugs must be used for all earth wiring connections.

→ Avoid ground loops when installing multiple variable frequency drives in one control panel. Make sure that all metallic devices that are to be grounded have a broad area connection with the mounting plate.

3.5.2.1 Protective earth

This refers to the legally required protective earth for a variable frequency drive. An earthing terminal on the variable frequency drive, or the system earth, must be connected to a neighboring steel element in the building (beam, ceiling joist), an earth electrode in the ground, or a mains earth bus. The earth points must meet the requirements set forth by the applicable national and local industrial safety regulations and/or regulations for electrical systems.

3.5.2.2 Motor earthing

The motor earthing must be connected to one of the earthing terminals on the variable frequency drive, as well as to the central earth point on the power drive system (PDS). Earth connections to a neighboring steel element in the building (e.g., beam, ceiling joist), a ground rod in the ground, or a mains earth bus must meet the requirements set forth in the applicable national and regional industrial safety regulations and/or regulations for electrical systems.

3.5.2.3 Earth-fault protection

A fault current to earth can be produced by variable frequency drives due to their system characteristics. DC1 series variable frequency drives have been designed in such a way that the smallest possible fault current will be produced in compliance with standards applicable worldwide. In the case of devices powered with a three-phase supply (DC1-3…), this fault current must be monitored by an AC/DC-sensitive type B residual current device (RCD).

3.5.3 EMC screw

FS1 to FS3 DC1 variable frequency drives with an IP20 degree of protection feature a screw on the left side that is labeled EMC.

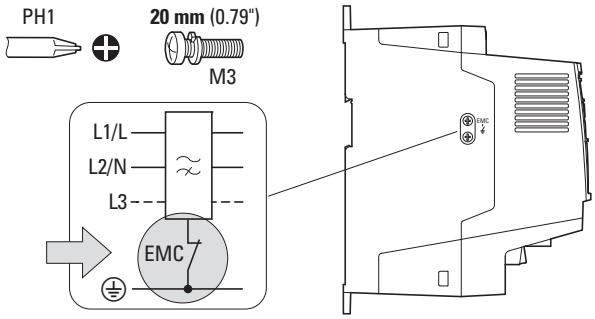

Figure 36: EMC screw

In the case of units with a frame size of FS4, there will be two screws labeled EMC: one next to the main terminals and another one next to the motor terminals.

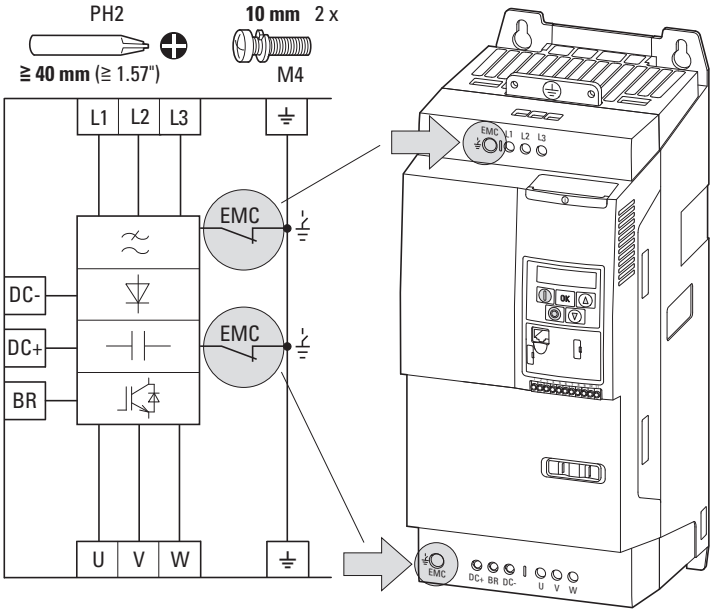

Figure 37: Two EMC screws on devices with a frame size of FS4

All four frame sizes of the variable frequency drives in protection class IP66 have an EMC screw in the housing.

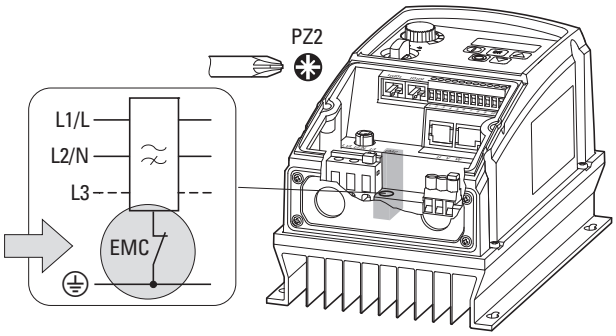

Figure 38: EMC screw in protection class IP66

> *NOTICE*
> The screw labeled EMC must not be manipulated as long as the variable frequency drive is connected to the mains or there is a DC link voltage.

→ The EMC screw galvanically connects the EMC filter's mains-side capacitors to the earthing (PE). The screw must be screwed in all the way to the stop (factory setting) in order for the variable frequency drive to comply with EMC standards.

In the case of units with a frame size of FS4, the DC link filter (Y class capacitors) is galvanically connected to the earthing (PE) via the two EMC screws (motor connection side).

> *NOTICE*
> In the case of units with a frame size of FS4, both EMC screws must be either installed or removed, i.e., it is not permissible for one of them to remain installed while the other one is removed.

Due to their system characteristics, variable frequency drives with an internal EMC filter will produce a larger fault current to earth than devices without a filter. For applications in which this larger leakage current may cause malfunction messages or disconnections (residual current device), the EMC filter's internal protective earth can be disconnected (remove the EMC screw to do this).
Local EMC regulations must be taken into account when doing so.
If necessary, a specific low-leakage-current EMC filter (DX-EMC...-L) must be connected upstream.
In connections to isolated power sources (IT networks), the EMC screw should be removed. The earth fault monitors required for IT networks must be suitable for operation with power electronic devices (IEC 61557-8).

3.5.4 Screen earth kit

Cables that are not screened work like antennas (sending, receiving).

→ For a proper EMC connection, cables emitting interference (e.g. motor cables) and susceptible cables (analog signal and measured values) must be screened and laid separately from each other.

The effectiveness of the cable screen depends on a good screen connection and a low screen impedance.

→ Use only screens with tinned or nickel-plated copper braiding. Screens made of steel braids or metal conduits are either not suitable or suitable only to a limited extent (depending on the EMC environment).

→ Control and signal lines (analog, digital) should always be grounded on one end, in the immediate vicinity of the supply voltage source (PES).

3.5.5 EMC cable brackets

Frame-size-specific DX-EMC-MNT-… cable brackets can be used to easily route and secure cables in the connection area of a DC1 variable frequency drive with a frame size of FS1 to FS3 and an IP20 degree of protection. These cable brackets are mounted on the variable frequency drive's mains connection side (DX-EMC-MNT-…**N**) and motor side (DX-EMC-MNT-…**M**) using the corresponding mounting holes, and are then connected to the drive's earthing.

The cable brackets' integrated hole pattern (M4 screw tread) makes it possible to secure the cables being connected and relieve any strain on them by using the corresponding gland plates. It also makes it possible to have a good 360° EMC connection (PES) in the case of screened cables.

These cable brackets are made of galvanized sheet steel.

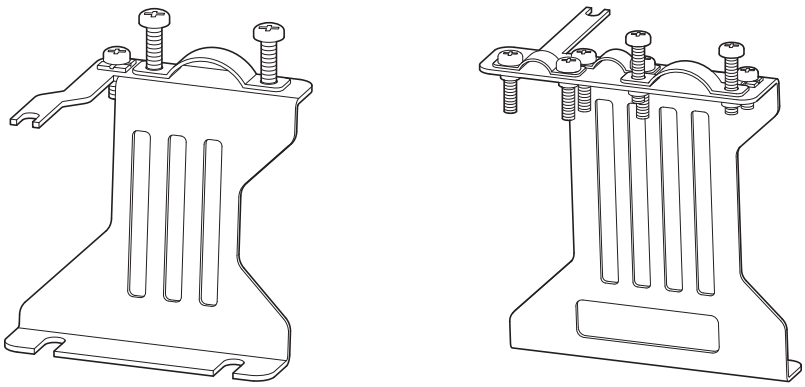

Figure 39: DX-EMC-MNT-...**N** (left), net and
DX-EMC-MNT-...**M** (right), motor, cable brackets

Table 5: Cable brackets

Cable bracket	Size of variable frequency drive DC1 in IP20	Gland plates	
		Quantity	Designation
DX-EMC-MNT-1N	FS1	1	Mains connection
DX-EMC-MNT-1M	FS1	2	Control cables, motor connection
DX-EMC-MNT-2N	FS2	1	Mains connection
DX-EMC-MNT-2M	FS2	3	Control cables, motor connection, external braking resistance
DX-EMC-MNT-3N	FS3	1	Mains connection
DX-EMC-MNT-3M	FS3	3	Control cables, motor connection, external braking resistance

→ We recommend connecting the DX-EMC-MNT-… cable brackets to the variable frequency drive before installing it.

For more information and technical data on DX-EMC-MNT-… EMC cable brackets, please refer to instruction leaflet IL040010ZU.

DX-EMC-MNT-… EMC cable brackets are sold as individual units. There are different brackets for each DC1 variable frequency drive size (FS1 to FS3).
The gland plates and their fixing screws are included in the equipment supplied with the cable brackets.

Connection example

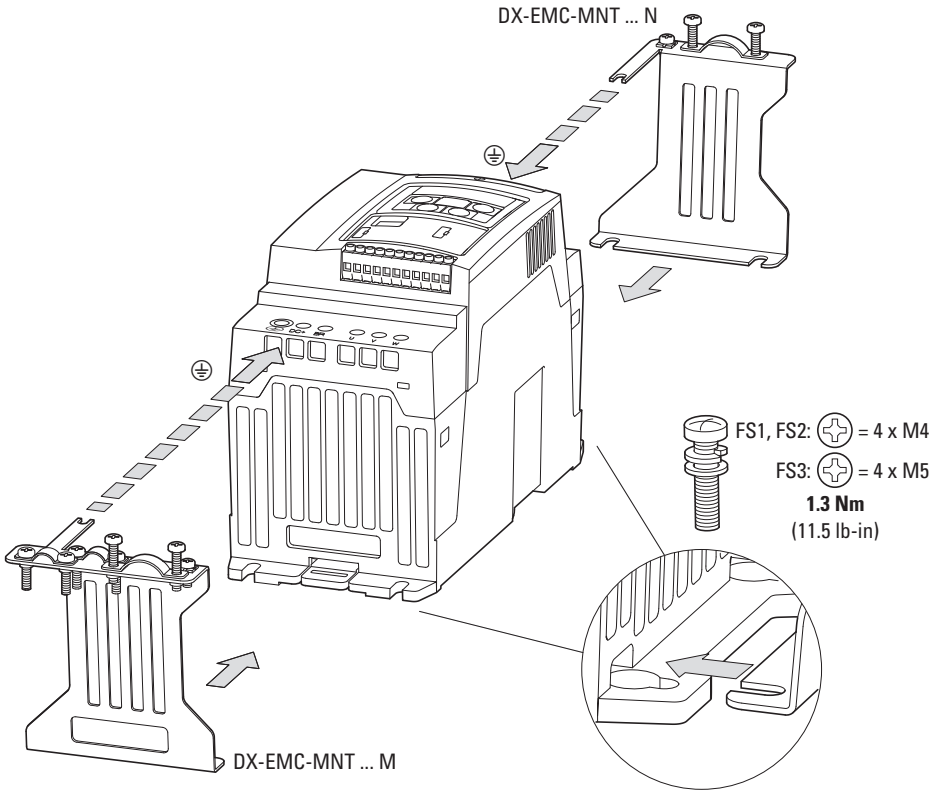

Figure 40: EMC cable brackets (example: FS2 frame size)

3.5.6 General installation diagram

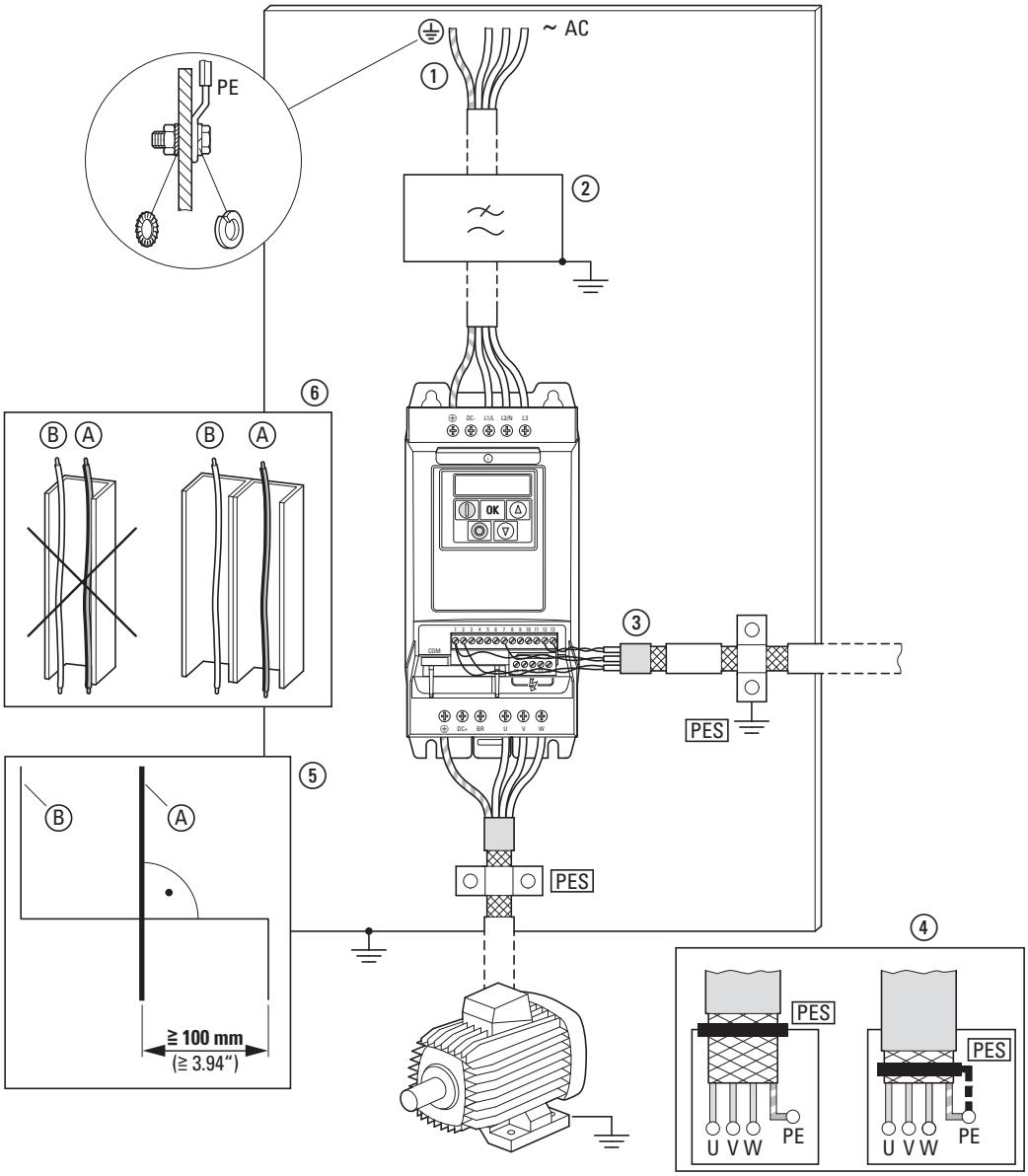

Figure 41: EMC installation

1. Mains connection: Supply voltage, central earthing connection for control panel and machine
2. External radio interference suppression filter: Optional DX-EMC… radio interference suppression filter for longer motor cables or use in a different EMC environment
3. Control connection: Connection for the digital and analog control cables and communication via RJ45 plug-in connection
4. Motor connection: Connection (PES) between the screened motor cable and the motor's terminal box, made according to EMC requirements, with metal cable gland or with gland plate in the terminal box.
5. Cable routing: Power cables (A) and control cables (B) spatially routed separately from each other. If different potential levels need to cross, they should do so at a right angle as far as possible.
6. Cable routing: Do not route power cables and control cables parallel to each other in a single cable duct. If they need to be routed in parallel, they should be in separate metal cable ducts (in order to meet EMC requirements).

3.6 Electrical Installation

CAUTION

Carry out wiring work only after the variable frequency drive has been correctly mounted and secured.

DANGER

Electric shock hazard - risk of injuries!
Carry out wiring work only if the unit is de-energized.

NOTICE

Fire hazard!
Only use cables, circuit-breakers, and contactors that feature the indicated permissible nominal current value.

NOTICE

On DC1 variable frequency drives, earth leakage currents can be greater than 3.5 mA (AC).
Accordingly, as per IEC/EN 61800-5-1, an additional protective conductor must be connected or the protective conductor's cross-sectional area must be at least 10 mm^2.

DANGER

The components in the variable frequency drive's power section remain energized up to five minutes after the supply voltage has been switched off (intermediate circuit capacitor discharging time).

Pay attention to hazard warnings!

→ Complete the following steps with the specified tools and without using force.

3.6.1 Connection to power section

The connection to the power section is normally made via the connection terminals:

- L1/L, L2/N, L3, PE for the mains-side supply voltage.
  The phase sequence does not matter.
- DC+, DC-, PE for DC link coupling
- U, V, W, PE for the connection to the motor
- BR, DC+, PE for an external brake resistor

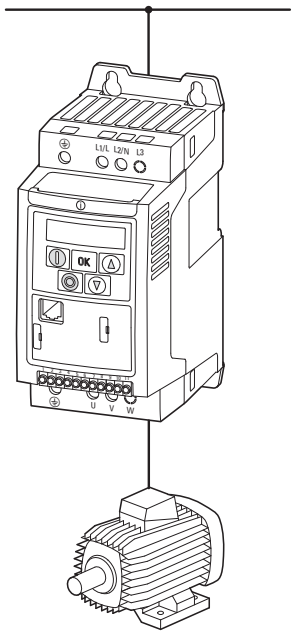

Figure 42: Connection in power section (schematic)

The number and the arrangement of the connection terminals used depend on the variable frequency drive's size and model.

> *NOTICE*
>
> The variable frequency drive must always be connected with ground potential via a grounding conductor (PE).

3.6.1.1 Terminals in power section for units with IP20 degree of protection

Table 6: Terminals (IP20)

Size	Connection terminals	Description
FS1	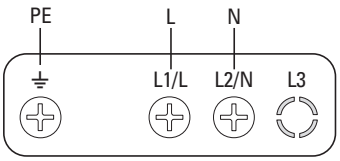	Connection with single-phase supply voltage: • DC1-1D… (115 V) • DC1-12… (230 V) **Note:** Connection to terminal L3 not permissible!
	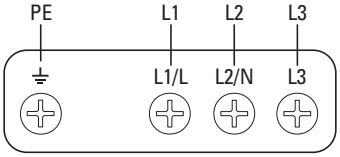	Connection with three-phase supply voltage: • DC1-32… (230 V) • DC1-34… (400 V, 480 V)
	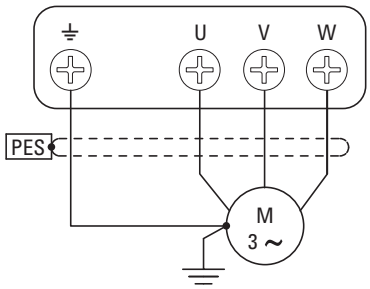	Motor connection for three-phase motors: • DC1-1D… (230 V) • DC1-12… (230 V) • DC1-32… (230 V) • DC1-34… (400 V, 460 V)
FS2, FS3	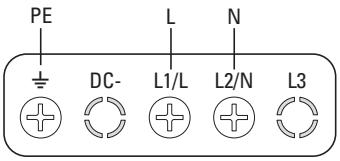	Connection with single-phase supply voltage (115 V, 230 V): • DC1-1D (115 V) • DC1-12 (230 V) **Note:** Connection to terminal L3 not permissible! **DC-**: Negative DC link connection if using DC link coupling. The terminal's plastic cover can be removed if necessary.
	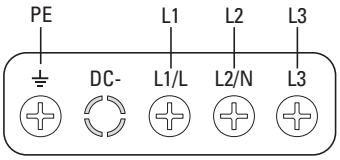	Connection with three-phase supply voltage: • DC1-32… (230 V) • DC1-34… (400 V, 480 V) **Note:** **DC-**: Negative DC link connection if using DC link coupling. The terminal's plastic cover can be removed if necessary.
	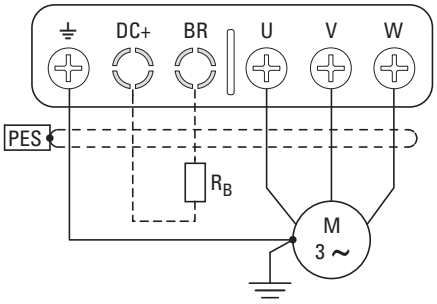	Motor connection for three-phase motors: • DC1-1D… (230 V) • DC1-12… (230 V) • DC1-32… (230 V) • DC1-34… (400 V, 460 V) **Note:** **DC+**: Positive DC link connection if using DC link coupling or braking chopper. The terminal's plastic cover can be removed if necessary. **BR**: Terminal for brake resistor (braking chopper output). The terminal's plastic cover can be removed if necessary.

Size	Connection terminals	Description
FS4	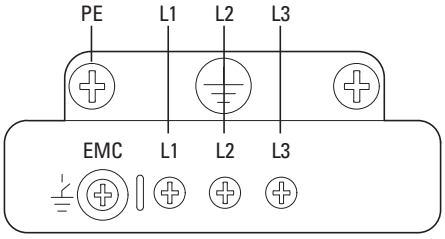	Connection with three-phase supply voltage: • DC1-32… (230 V) • DC1-34… (400 V, 480 V)
	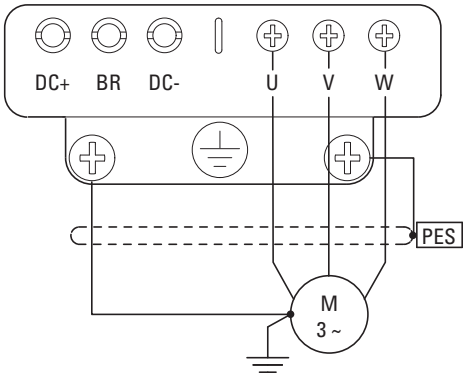	Motor connection for three-phase motors: • DC1-32… (230 V) • DC1-34… (400 V, 480 V) **Note:** **DC+**, **DC-**: DC link connection if using DC link coupling. The terminals' plastic cover can be removed if necessary. **DC+**, **BR**: Connection for external brake resistors (BR = braking chopper output). The terminals' plastic cover can be removed if necessary.

3.6.1.2 Terminals in power section for units with IP66 degree of protection

On units with an IP66 degree of protection, the connection area is located behind the lower enclosure cover.

To open the cover, the two screws must be loosened. You can lift the cover afterwards.

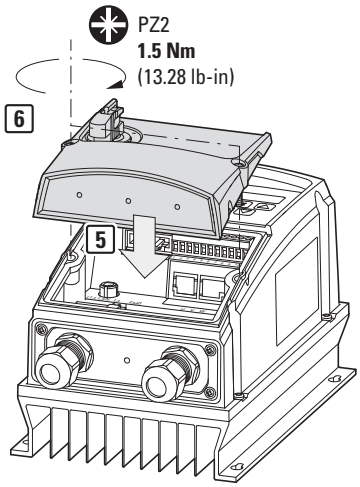

Figure 43: Removing the lower housing cover

Table 7: Terminals (IP66)

Size	Connection terminals	Description
FS1	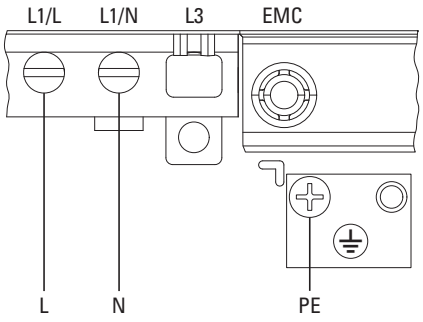	Connection with single-phase supply voltage: • DC1-1D… (115 V) • DC1-12… (230 V) **Note:** Connection to terminal L3 not permissible!
	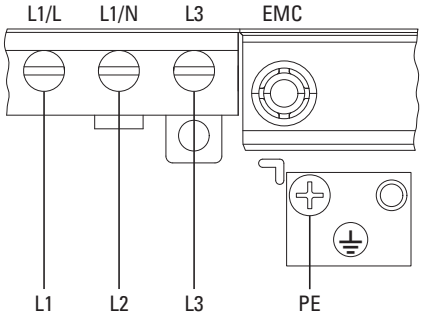	Connection with three-phase supply voltage: • DC1-32… (230 V) • DC1-34… (400 V, 480 V)
	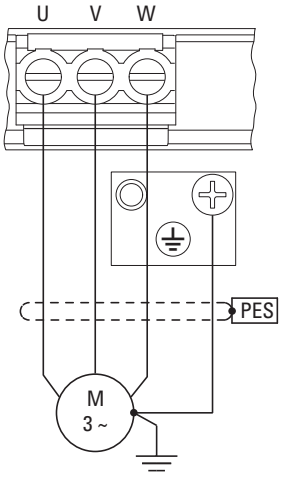	Motor connection for three-phase motors: • DC1-1D… (230 V) • DC1-12… (230 V) • DC1-32… (230 V) • DC1-34… (400 V, 460 V)

Size	Connection terminals	Description
FS2, FS3	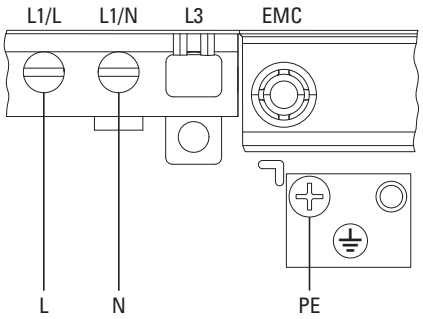	Connection with single-phase supply voltage (115 V, 230 V): • DC1-1D (115 V) • DC1-12 (230 V) **Note:** Connection to terminal L3 not permissible!
	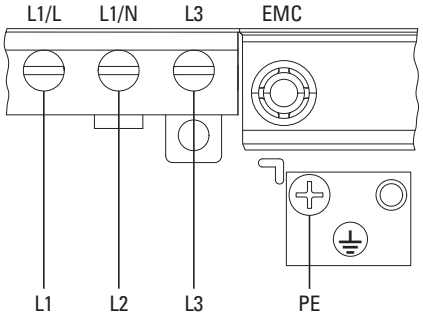	Connection with three-phase supply voltage: • DC1-32… (230 V) • DC1-34… (400 V, 480 V)
	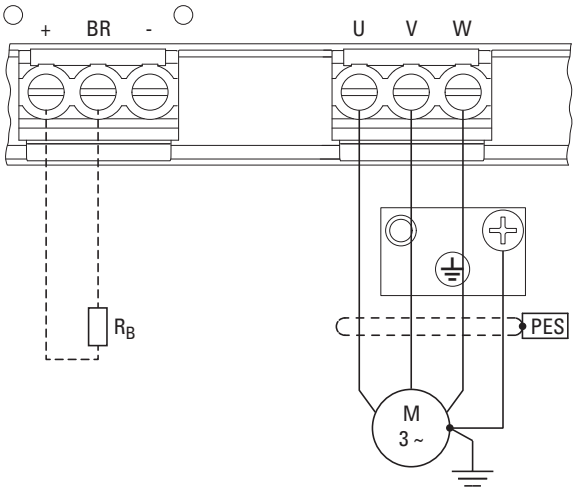	Motor connection for three-phase motors: • DC1-1D… (230 V) • DC1-12… (230 V) • DC1-32… (230 V) • DC1-34… (400 V, 460 V) **Note:** **+**, **BR**: Connection for external brake resistors (**BR** = Output Brake Chopper). The terminals' plastic cover can be removed if necessary. Terminal **+** has the same function as terminal **DC+** in devices with an IP20 degree of protection.

Size	Connection terminals	Description
FS4	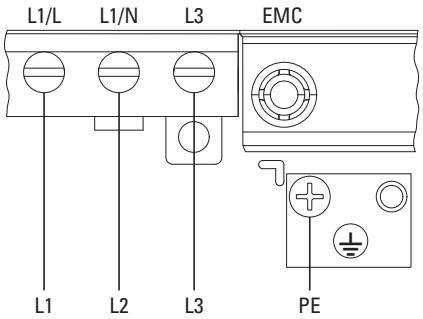	Connection with three-phase supply voltage: • DC1-32… (230 V) • DC1-34… (400 V, 480 V)
	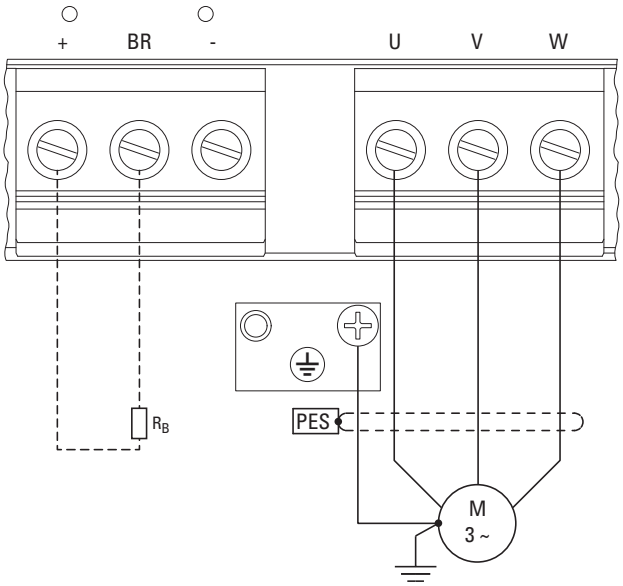	Motor connection for three-phase motors: • DC1-32… (230 V) • DC1-34… (400 V, 460 V) **Note:** **+**, **BR**: Connection for external brake resistors (**BR** = Output Brake Chopper). The terminals' plastic cover can be removed if necessary. Terminal **+** has the same function as terminal **DC+** in devices with an IP20 degree of protection.

3.6.1.3 Stripping lengths and tightening torques

3.6.1.4 IP20

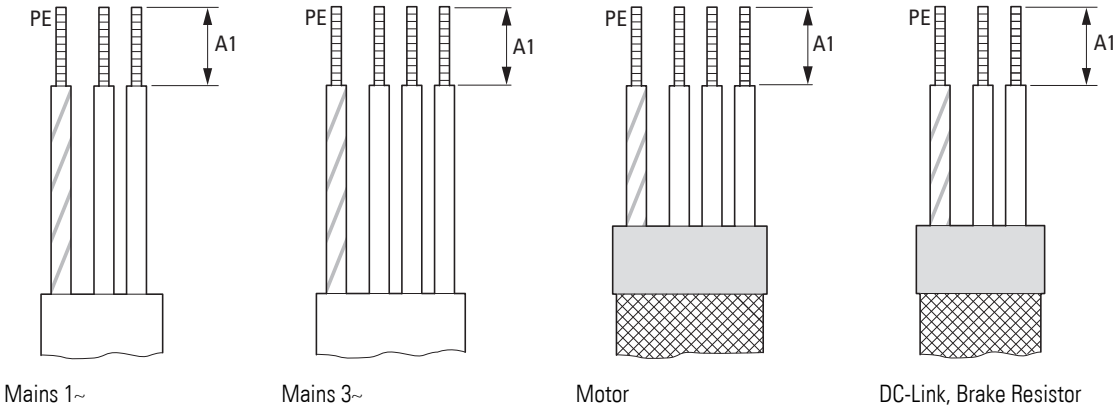

Figure 44: Stripping lengths in the power section

Mains = Electrical power network (supply voltage)
Motor = Motor connection
DC link = Internal DC link (DC link coupling)
Brake Resistor = Braking resistance (connection to brake chopper)

Table 8: Terminal capacities and tightening torques

Size	A1		Maximum terminal capacity		Tightening torque	
	mm	in	mm^2	AWG	N/m	lb-in
FS1	8	0.3	8	8	1	8.85
FS2	10	0.39	8	8	1	8.85
FS3	10	0.39	8	8	1	8.85
FS4	10 - 11	0.39 - 0.43	16	5	2.1	19
			PE connection: Ring terminal with a diameter of 6.3 mm (0.25")			

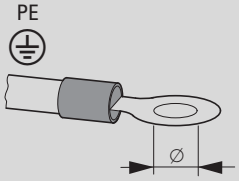

3.6.1.5 IP66

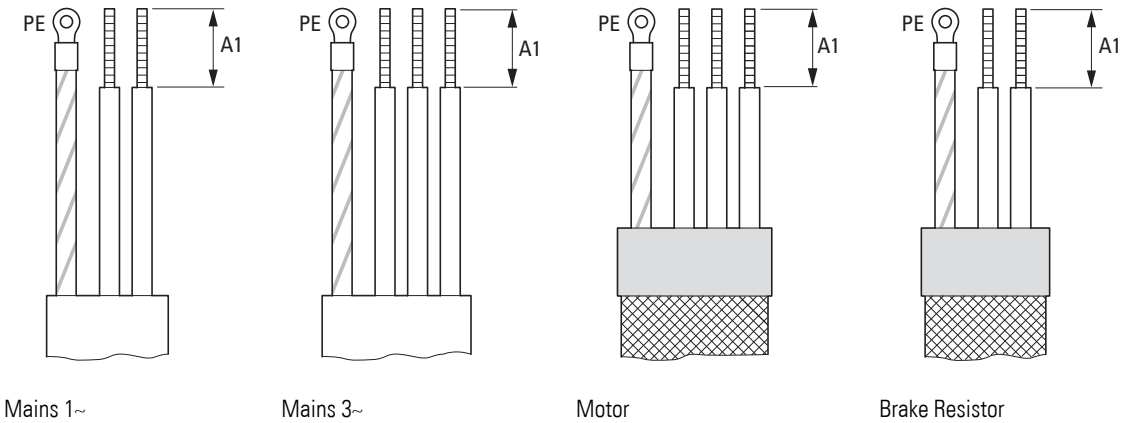

Figure 45: Stripping lengths in the power section

Mains = Electrical power network (supply voltage)
Motor = Motor connection
DC link = Internal DC link (DC link coupling)
Brake Resistor = Braking resistance (connection to brake chopper)

Table 9: Terminal capacities and tightening torques

Baugröße	Screw	A1	Maximum terminal capacity	Tightening torque		
				DC1-…-A66…	DC1-…-A6S…	
					Mains	Motor
	Typ	mm (in)	mm^2 (AWG)	Nm (lb-in)	Nm (lb-in)	Nm (lb-in)
FS1	M4	10 (0.39)	8 (8)	1 (8.85)	0.8 (7.08)	1 (8.85)
FS2	M4	10 (0.39)	8 (8)	1 (8.85)	0.8 (7.08)	1 (8.85)
FS3	M5	10 (0.39)	8 (8)	1 (8.85)	0.8 (7.08)	1 (8.85)
FS4	M6	10 (0.39)	16 (6)	2.2 (19.47)	2 (17.70)	2.2 (19.47)

3.6.1.6 Connecting the motor cable

The screened cables between the variable frequency drive and the motor should be as short as possible.

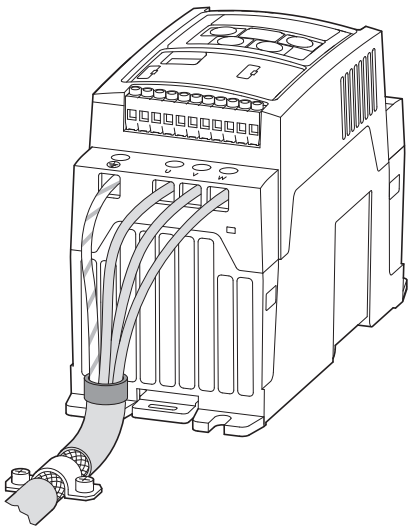

Figure 46: Connection on motor side

- Connect the screening, on both sides and across a large area (360° overlap), to the protective earth (PE) ⏚.The power screening's protective earth (PES) connection should be in the immediate proximity of the variable frequency drive.and directly on the motor terminal box.
- Prevent the screen earth kit from becoming unbraided, i.e. by pushing the separated plastic covering over the end of the shielding or with a rubber grommet on the end of the shielding. Terminate the cable screen across a large area at the end (PES).
  Alternatively, you can twist the screen braid and connect it to the protective earth with a cable lug. In order to prevent EMC interference, this twisted screen connection should be as short as possible (recommended value for the twisted cable screen: b ≧ 1/5 a).

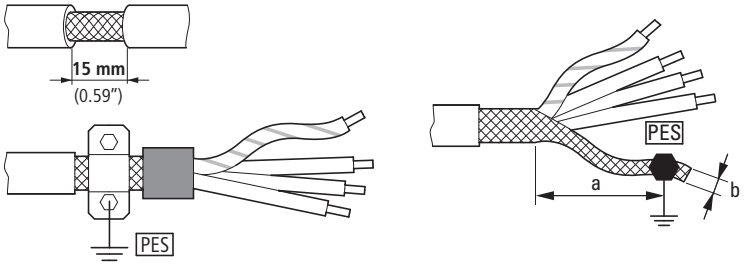

Figure 47: Screened connection cable in motor circuit

Screened, four-wire cable is recommended for the motor cables. The green-yellow conductor in these cables must be used to connect the motor's and variable frequency drive's PE terminals, minimizing the loads on the cable screen (high equalizing currents).

The following figure shows the construction of a four-wire, screened motor line (recommended specifications).

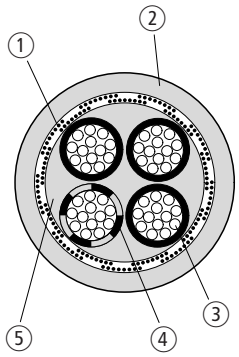

Figure 48: Four-core, screened motor supply cable

1. Cu shield braid
2. PVC outer casing
3. Flexible wire (copper strands)
4. PVC core insulation, 3 x black, 1 x green–yellow
5. Textile and PVC fillers

If there are additional subassemblies in a motor feeder (such as motor contactors, overload relays, motor chokes, sine filters or terminals), the shielding of the motor cable can be interrupted close to these subassemblies and connected to the mounting plate (PES) with a large area connection. Free or non-shielded connection cables should not be any longer than about 300 mm (max. 500 mm).

→ In the case of units with a frame size of FS1, FS2, or FS3, the screened motor cable can also be connected using an EMC cable bracket (DX-EMC-MNT…M) → Section 3.5.5, "EMC cable brackets", page 75.

3.6.1.7 Cable glands IP66

In the case of units with an IP66 degree of protection, a total of six cable glands can be installed. The lower section will come with two knockouts for cable glands that have already been removed and that are intended for the connections in the power section (Mains ①, Motor ②).
Guide holes are provided for an external braking resistor. In the housing cover arranged above there are three further guide holes for the feed-through of control and bus cables.

→ Make sure that no chips get into the unit when drilling.

Drilling

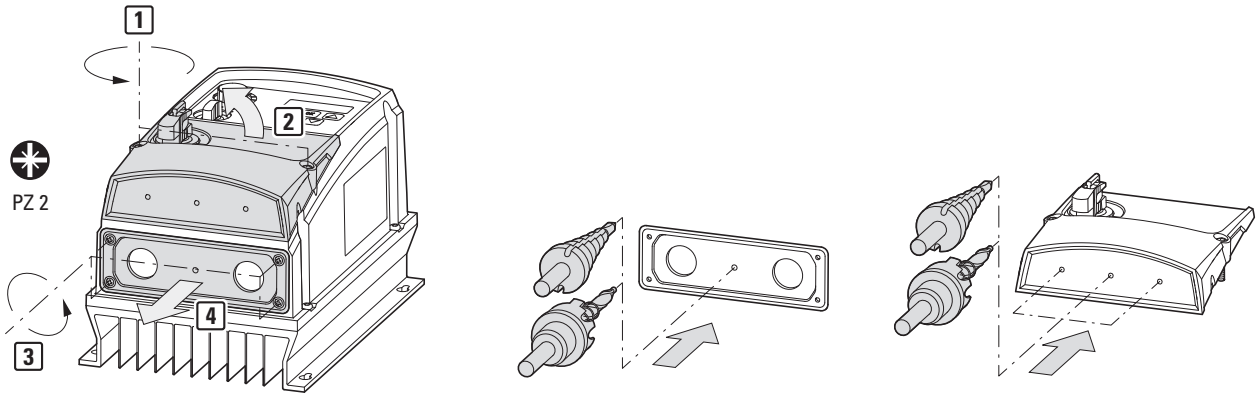

Figure 49: Bushings

In order to be able to drill further bushings, please loosen the two screws [1] and remove the housing cover [2].

To drill holes in the metal connection plate, loosen the four screws [3] and remove the connection plate [4]. You can now drill further holes without chips getting into the inside of the device.

Installaling the cable glands

Insert a plastic gland into the knockout on the left – which could already have been punched out at the factory – in order to thread in the power supply cord. Due to EMC reasons, you should use an metallic EMC cable gland in the knockout on the right in order to connect the motor cable screen across a large area and ground it.

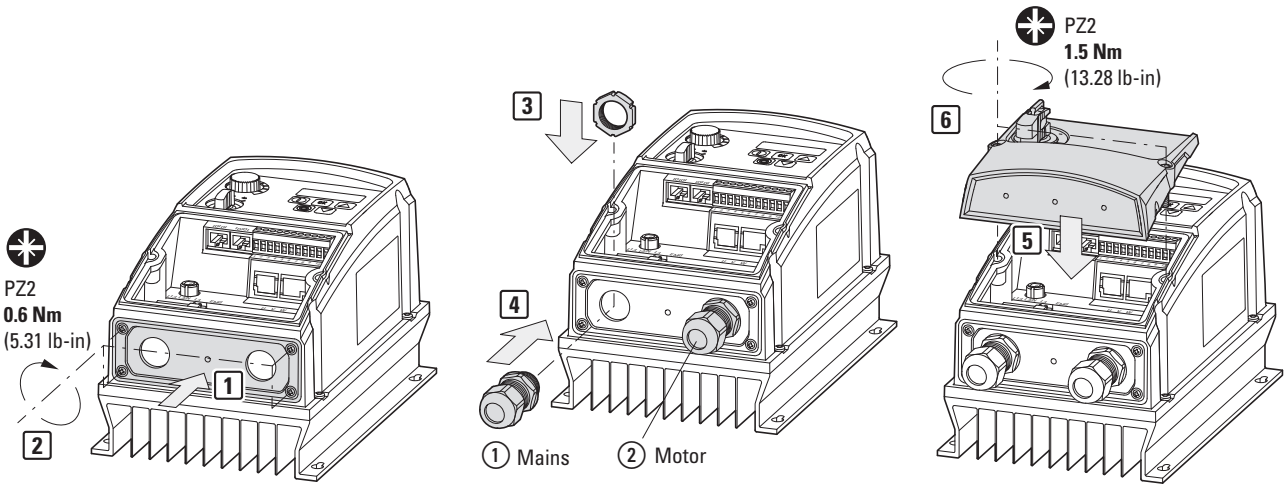

Figure 50: Installaling the cable glands

Place the connection plate on [1] and retighten the four screws in the connection plate [2]. Now mount the cor-responding screw connections and tighten them [3], [4]. Finally, place the housing cover on [5] and tighten the fastening screws [6].

→ Make sure that the cable glands have at least an IP66 degree of protection.

Table 10: Cable glands that can be used (→ Figure 50)

Range	Size	Hole size	PG-gland	Metric gland
Control section Control	FS1, FS2, FS3, FS4	–	2 x PG 13,5 1 x PG 16	2 x M20 1 x M25
Power section Mains ① Motor ②	FS1	2 x 22 mm	2 x PG 13,5	2 x M25
	FS2	2 x 27,2 mm	2 x PG 21	2 x M32
	FS3	2 x 27,2 mm	2 x PG 21	2 x M32
	FS4	2 x 37 mm	2 x PG 29	2 x M40

The EMC cable gland must be earthed properly – e.g., with a metal lock nut that is then connected to the PE terminal.

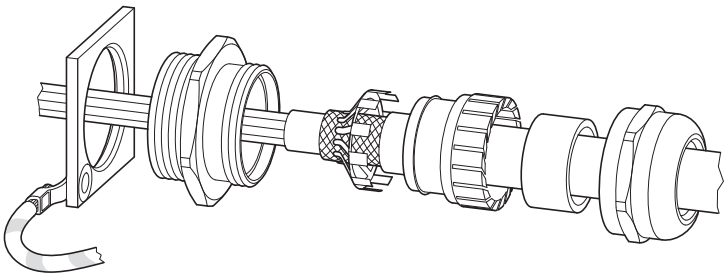

Figure 51: Example: diagram of EMC gland assembly

3.6.2 Connection on control section

The connection to the control section is made using the plug-in connection terminals:

- Terminals 1, 5, 7, 9: Control voltage output (+24V, +10V, 0V),
- Terminals 2, 3, 4, 6: for digital and analog input signals
- Terminal 8: for a digital or analog output signal
- Terminals 10, 11: for a potential-free relay output

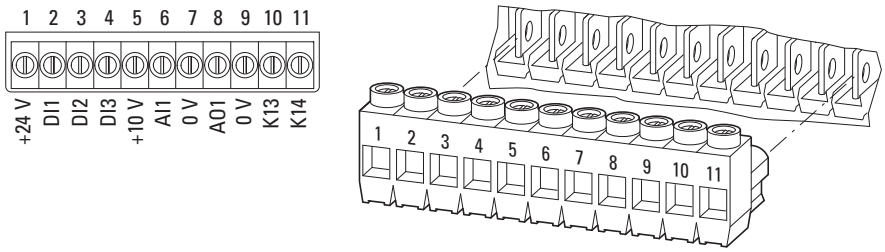

Figure 52: Control signal terminal layout and factory designations

ESD measures

Discharge yourself on a grounded surface before touching the control terminals and the circuit board to prevent damage through electrostatic discharge.

NOTICE

Do not connect an external voltage source to control signal terminal 1 (+24 V)!

DANGER

Before touching or handling the wired control signal terminals, check to make sure that the terminals (terminals 10 and 11) are de-energized.

→ The relay contact (terminals 10, 11) may be wired to a higher-level control circuit that has a dangerous voltage (e.g., 110 V AC, 230 V AC) even when the variable frequency drive is de-energized.

→ When using more than one control voltage, we recommend using separate cables.

Example
24 V DC at control signal terminals 1, 2, 3, 4, 6, and 8 and 110 or 230 V AC at control signal terminals 10 and 11.

3.6.2.1 Terminal capacities and stripping lengths

The terminal capacities and stripping lengths are listed in the following table.

Table 11: Control signal terminal sizes and designs

			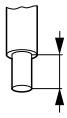				
mm²	**mm²**	**AWG**	**mm**	**in**	**N/m**	**ft-lbs**	**mm**
0.2 - 2.5	0.2 - 1.5	24 - 12	5	0.2	0.5	0.42	0.4 x 2.5

3.6.2.2 Control signal terminal connection information and functions

The functions that are set in the ex-factory and the electrical connection data of all control signal terminals are listed in the following table.

Table 12: Factory-set functions of the control signal terminal

Connection terminal		Signal	Description	Default Setting
1	+24 V	Control voltage for DI1 - DI4, output (+24 V)	Maximum load 100 mA, Reference potential 0 V **Notice:** Do not connect an external voltage source!	–
2	DI1	Digital Input 1	+8 - +30 V (High, R_i > 6 kΩ)	Start enable FWD
3	DI2	Digital input 2	+8 - +30 V (High, R_i > 6 kΩ)	Start enable REV
4	DI3 AI2	Digital Input 3 Analog Input 2	• digital: +8 - +30 V (high) • Analog: 0 - +10 V (R_i > 72 kΩ) 0/4 - 20 mA (R_B = 500 Ω) Can be switched with parameter P-16 • 1 - 10 kΩ	Fixed frequency FF1
5	+10 V	Reference voltage, Output (+10 V)	Maximum load: 10 mA Reference potential: 0 V	–
6	AI1 DI4	Analog Input 1 Digital Input 4	• Analog: 0 - +10 V (R_i > 72 kΩ) 0/4 - 20 mA (R_B = 500 Ω) Can be switched with parameter P-16 • 1 - 10 kΩ • digital: +8 - +30 V (high)	Frequency Reference (fixed frequency)
7	0 V	Reference potential	0 V = connection terminal 9	–
8	AO1 DO1	Analog output 1 Digital output 1	• Analog: 0 - +10 V, maximum 20 mA Can be switched with parameter P-25 • digital: 0 - +24 V	Output Frequency
9	0 V	Reference potential	0 V = connection terminal 7	–
10	K13	Relay 1, N/O	Maximum switching load: 250 V AC/6 A or 30 V DC/5 A	RUN
11	K14	Relay 1, N/O	Maximum switching load: 250 V AC/6 A or 30 V DC/5 A	RUN

→ The control terminals' functions and electrical parameters can be changed with

- Parameter,
- Expansion modules DXC-EXT-… for devices in IP20 (→ Section 7.9.2, "DXC-EXT-2RO output expansion", page 217 and → Section 7.9.3, "DXC-EXT-2RO1AO output expansion", page 219).

3.6.2.3 Connection example

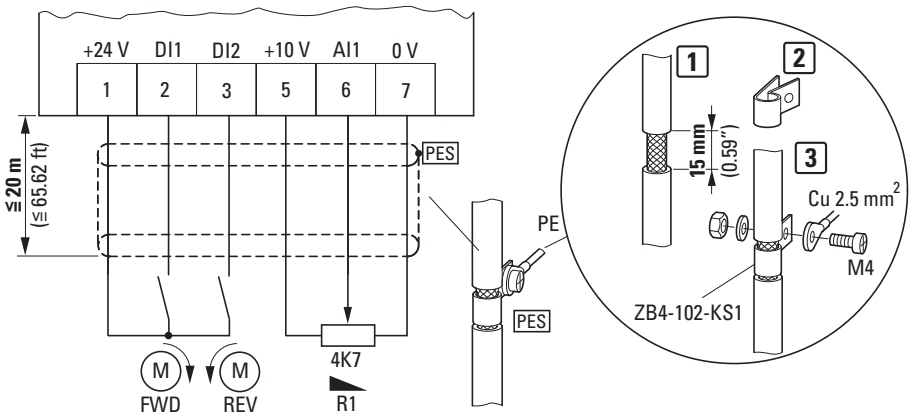

Figure 53: Simple connection example

- Two operating directions:
  - FWD = clockwise rotating field
  - REV = anticlockwise rotating field
- R1: External reference value potentiometer, frequency reference value 0 - f_{max} (P-01)

The control cables should be screened and twisted for the external connection. The screening is applied on one side in the proximity of the variable frequency drive (PES).

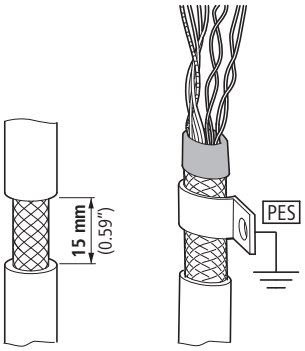

Figure 54: Screen termination at one end (PES) close to the variable frequency drive

Alternatively, in addition to the broad area gland plate, you can twist the screen braid at the end and connect to the protective earth with a cable lug. To prevent EMC disturbance, this twisted shielding connection should be made as short as possible

Prevent the screen from becoming unbraided at the other end of the control cable, e.g. by using a rubber grommet. The screen braid must not make any connection with the protective ground here because this would cause problems with an interference loop.

Control signal terminals

The DC1 variable frequency drive has four control inputs (control terminals 2, 3, 4, and 6). Two of these are parameterizable as digital control inputs; while the others can be set to work as digital or analog control inputs.

The variable frequency drive comes with the following default setting:

- Control signal terminal 2 as digital input 1 (DI1),
- Control signal terminal 3 as digital input 2 (DI2),
- Control signal terminal 4 as digital input 3 (DI3),
- Control signal terminal 6 as analog input 1 (AI1).

Control signal terminal 8 can be used as a digital or as an analog output.It is used as an analog output (AO) in the default configuration that comes with the variable frequency drive when it is delivered.

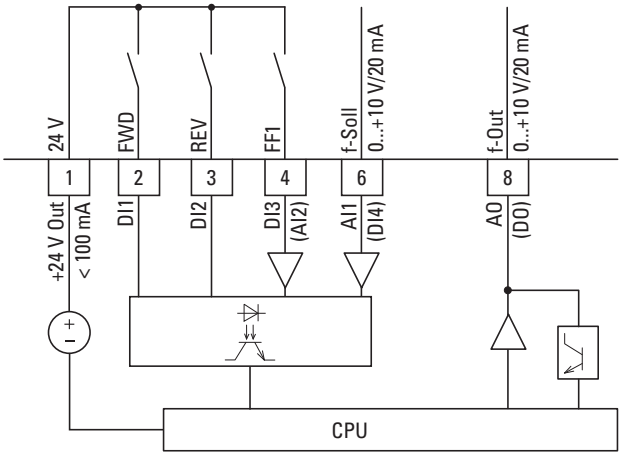

Figure 55: Control signal terminals (D = digital/A = analog)

3.6.2.4 Digital Input Signals

Control terminals 2, 3, 4, and 6 all have the same function and mode of operation as digital inputs (DI1 to DI4).

A logic level of +24 V (positive logic) is used:

- 8 - 30 V = High (logic “1”)
- 0 - 4 V = Low (logic “0”)

The internal control voltage from control signal terminal 1 (+24 V, maximum 100 mA) or an external voltage source (+24 V) can be used for this.
The permissible residual ripple must be less than ±5 % $\Delta U_a/U_a$.

→ If you use an external voltage source, make sure to connect the 0-V potentials of the external voltage source to the 0-V potentials of the variable frequency drive.

→ Control terminals 7 and 9 are the common 0 V reference potential for all analog and digital input signals.

Optional modules DXC-EXT-IO110 and DXC-EXT-IO230 can be used to optically isolate the digital inputs (DI1 to DI4) and integrate them directly into control circuits with 110 V / 230 V. Values of 80 to 110/230 V AC will be recognized as a high signal, → Section 7.9.1, “DXC-EXT-IO… coupling module“, page 215.

3.6.2.5 Digital Output (Transistor)

When using the device's default configuration, control signal terminal 8 will be configured as an analog output (AO).
It can be set to work as a digital output instead (DO) with parameter P-25:

Table 13: Control signal terminal 8 (DO)

P-25	Signal 1 = High (+24 V)	Description
0	RUN	Enable (FWD/REV)
1	Ready	Ready for operation. No fault signal
2	Actual value = Setpoint value	The output frequency (f-Out) or speed is equal to the setpoint value (REF).
3	Error (Fault)	Fault (not ready).
4	f-Out ≧ P-19	The output frequency (f-Out) is greater than or equal to the value set in P-19 (RO1 upper limit).
5	I-Out ≧ P-19	The output current (I-Out) is greater than or equal to the value set in P-19 (RO1 upper limit).
6	f-Out < P-19	The output frequency (f-Out) is less than the value set in P-19 (RO1 upper limit).
7	I-Out < P-19	The output current (I-Out) is less than the value set in P-19 (RO1 upper limit).
10	Not Enable	No enable signal (FWD/REV)
11	Actual value ≠ Setpoint value	The output frequency (f-Out) / speed is not equal to the setpoint value (REF).

Digital output DO: Accuracy ≧ 1% relative to maximum value

Transistor output DO uses control signal terminal 8 to switch the device's internal control voltage (+24 V) as a digital signal (1 = High). The maximum permissible load current is 20 mA.

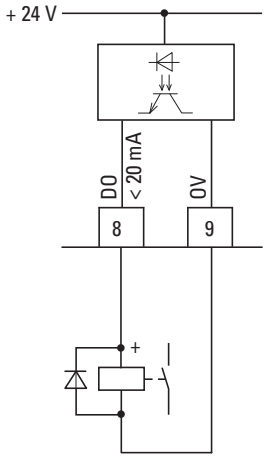

Figure 56: Connecting example (interposing relay with free-wheel diode ETS4-VS3)

→ Control terminals 7 and 9 are the common 0 V reference potential for all analog and digital input signals.

3.6.2.6 Analog input signals

Depending on how parameters P-12 and P-15 are set, control terminals 4 (AI2) and 6 (AI1) can be connected to analog signals.

Table 14: Control signal terminal 6 (AI1)

P-16	Signal	Description
0	0 - +10 V	Frequency reference value / Speed reference value. Manipulated variable range from minimum (P-02) to maximum (P-01) value. Default settings.
1	0 - +10 V	Frequency reference value/speed reference value with operating direction change depending on the parameterization (P-35, P-39)
2	0 - 20 mA	Current signal
3	4 - 20 mA	Current signal with open-circuit monitoring (< 3 mA) → Shutdown with fault message.
4	4 - 20 mA	Current signal with open-circuit monitoring (< 3 mA) → **No** shutdown if a fault is detected Operation will continue with fixed frequency/fixed speed 1 (P-20)
5	20 - 4 mA	Inverted current signal with open-circuit monitoring (< 3 mA) → Shutdown with fault message
6	20 - 4 mA	Inverted current signal with open-circuit monitoring (< 3 mA) → **No** shutdown if a fault is detected Operation will continue with fixed frequency/fixed speed 1 (P-20)
7	+10 - 0 V	Inverted voltage signal

Analog input AI1: Resolution: 12-bit, response time: < 16 ms

Table 15: Control signal terminal 4 (AI2)

P-47	Signal	Description
0	0 - +10 V	Voltage signal
1	0 - 20 mA	Current signal
2	4 - 20 mA	Current signal with open-circuit monitoring (< 3 mA) → Shutdown with fault message.
3	4 - 20 mA	Current signal with open-circuit monitoring (< 3 mA) → **No** shutdown if a fault is detected Operation will continue with fixed frequency/fixed speed 1 (P-20)
4	20 - 4 mA	Inverted current signal with open-circuit monitoring (< 3 mA) → Shutdown with fault message
5	20 - 4 mA	Inverted current signal with open-circuit monitoring (< 3 mA) → **No** shutdown if a fault is detected Operation will continue with fixed frequency/fixed speed 1 (P-20)
6	PtC-th	Thermistor connection (→ Section 3.6.3, "Thermistor connection", page 105)

Analog input AI2: Resolution: 12-bit, response time: < 16 ms
The way control terminal 4 works (DI3 AI2) can be changed with P-15 = 4 and P-12 = 6.

→ Control terminals 7 and 9 are the common 0 V reference potential for all analog and digital input signals.

P-16=1: Uni-polar 0 to 10 Volt Signal, bi-directional operation. The drive will operate the motor in the reverse direction of rotation if the analog reference after scaling and offset are applied is < 0.0%. e.g. for bidirectional control from a 0 – 10 volt signal, set P-35 = 200.0%, P-39 = 50.0%.

3.6.2.7 Analog output signal

When the device is used with its default settings, there will be an analog voltage signal (0 - 10 V) available at control signal terminal 8. This value will correspond to 0 to 100% of P-01 (maximum frequency / speed). The output can handle a maximum load of 20 mA.
Parameter P-25 is used to configure whether this output signal will be provided at the terminal:

Table 16: Control signal terminal 8 (AO)

P-25	Signal (0 - +10 V)	Description
8	f-Out	Output frequency (f-Out) / speed 0 - 100 % of P-01 Resolution: 0.1 Hz
9	I-Out	Output current (I-Out) / motor current 0 - 100 % of P-08 Resolution: 0.1 A
12	P-Out	Output power (P-Out) 0 - 200% relative to the DC1's rated motor output

Analog output AO: Accuracy ≧ 1% relative to maximum value; resolution: 10-bit

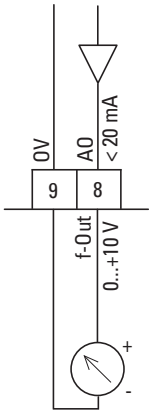

Figure 57: Analog output (AO) (connecting example)

Control terminals 7 and 9 are the common 0 V reference potential for all analog and digital input signals.

3.6.2.8 Relay contact

Control signal terminals 10 and 11 are connected to the DC1 variable frequency drive's internal relay contact (N/O) in a potential-free manner.

The relay function can be configured with parameter P-18:

Table 17: Control signal terminals 10 and 11 (RO1)

P-18	Contact closed	Description
0	RUN	Enable (FWD/REV) Default Setting
1	Ready	Ready for operation. No fault signal
2	Actual value = Setpoint value	The output frequency (f-Out) / speed is equal to the setpoint value (REF).
3	Error (Fault)	Fault (not ready)
4	f-Out ≧ P-19	The output frequency (f-Out) is greater than or equal to the value set in P-19 (RO1 upper limit).
5	I-Out ≧ P-19	The output current (I-Out) is greater than or equal to the value set in P-19 (RO1 upper limit).
6	f-Out < P-19	The output frequency (f-Out) is less than the value set in P-19 (RO1 upper limit).
7	I-Out < P-19	The output current (I-Out) is less than the value set in P-19 (RO1 upper limit).
8	Not Enable	No enable signal (FWD/REV)
9	Actual value ≠ Setpoint value	The output frequency (f-Out) / speed is not equal to the setpoint value (REF).
10	AI2 > P-19	The analog signal at control signal terminal 4 (AI2) is greater than the value set in P-19 (RO1 upper limit).
11	Ready-to-RUN	Ready for operation. The enable signal (ENA) is present and there is no fault signal present.

Parameter P-19 (RO1 upper limit) contains the limit used in P-18 (4, 5, 6, 7, 10) for relay RO1 (control signal terminal 10/11) or in P-25 (4, 5, 6, 7) for digital output DO (control signal terminal 8).

The electrical connection specifications for control terminals 10 and 11 are:

- 250 V AC, max. 6 A
- 30 V DC, max. 5 A

We recommend connecting the loads connected to the relay contact as follows:

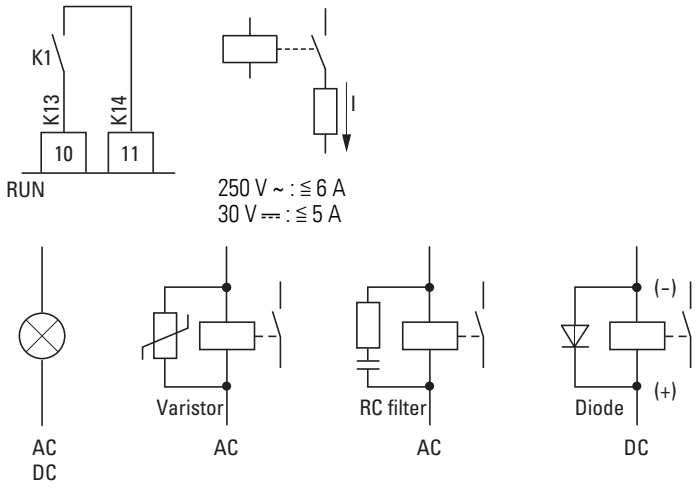

Figure 58: Connection examples with suppressor circuit

3.6.2.9 RJ 45 interface

The RJ45 interface on the front (IP20) or the two RJ45 interfaces located under the cover of the connection terminals (IP66) enable a direct connection to communication modules and fieldbus connections.

The internal RS-485 connection transmits Modbus RTU and CANopen data.

IP20

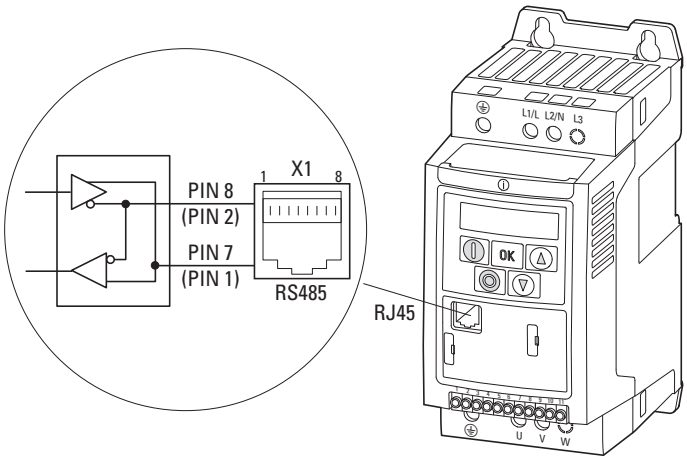

Figure 59: RJ 45 interface

IP66

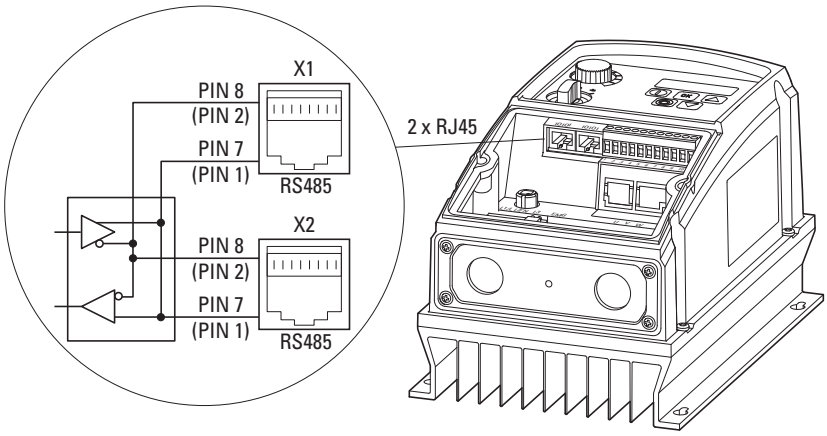

Abbildung 60: RJ45- interfaces

Table 18: Configuration of the RJ45 interface(s)

Pin	Meaning
PIN 1	CANopen -
PIN 2	CANopen +
PIN 3	0 V
PIN 4	OP-Bus -
PIN 5	OP-Bus +
PIN 6	+24V
PIN 7	Modbus RTU (A), RS485-
PIN 8	Modbus RTU (B), RS485+

→ The way the RJ45 interface works is described in the following manuals:

- MN040018: "Modbus RTU Communication manual for Variable Frequency Drives / Variable Speed Starters DA1, DB1, DC1, DE1"
- MN040019: "CANopen Communication Manual for Variable Frequency Drives/Variable Speed Starters DA1, DB1, DC1, DE11"
- MN040024: "PowerXL DX-NET-ETHERNET2-2 fieldbus connection EtherNet/IP for variable frequency drive DE1/DC1"
- MN040062: "PROFINET communication interface for PowerXL DE1 variable speed starter and DC1, DG1, DM1 variable frequency drive"
- MN04012009: "PowerXL™ – DX-NET-SWD Interface card SmartWire-DT for Variable Frequency Drives DC1"

→ DC1 variable frequency drives do not have an internal bus termination resistor.
Use EASY-NT-R if necessary.

3.6.2.10 Using the REV/0/FWD Selector Switch

By adjusting the parameter settings the variable frequency drive can be configured for multiple applications and not just for Forward or Reverse.

This could typically be for Hand/Off/Auto applications (also known and Local/Remote) for HVAC and pumping industries. The integrated switch operates in parallel with drive terminal 2 and terminal 3 as digital input 1 and digital input 2. By default, the integrated switch is enabled.

Table 19: Selector switch positions

P-69 = 0	DI1 = T2 OR Switch FWD		+24 V DC T1 T2	VFD Control Terminals External User Switches	OR	
P-69 = 1	DI1 = T2 only		+24 V DC T1 T2	VFD Control Terminals External User Switches		Drive Switch is disabled
P-69 = 2	DI1 = T2 OR Switch FWD OR Switch REV		+24 V DC T1 T2	VFD Control Terminals External User Switches	OR	OR
P-69 = 3	DI1 = T2 AND Switch FWD OR T2 AND Switch REV		+24 V DC T1 T2	VFD Control Terminals External User Switches	AND	
		OR	+24 V DC T1 T2	VFD Control Terminals External User Switches	AND	
P-69 = 4	DI1 = T2 AND Switch FWD		+24 V DC T1 T2	VFD Control Terminals External User Switches	AND	
P-70 = 0	DI2 = T3 OR Switch REV		+24 V DC T1 T2	VFD Control Terminals External User Switches	OR	
P-70 = 1	DI2 = T3 only		+24 V DC T1 T2	VFD Control Terminals External User Switches		Drive Switch is disabled
P-70 = 2	DI2 = T3 AND Switch REV		+24 V DC T1 T2	VFD Control Terminals External User Switches	AND	

3.6.3 Thermistor connection

Motor thermistors and motor thermal switches (Thermoclick) can be connected to control signal terminal 4 (DI3 = digital input 3) in order to provide protection against thermal motor overloads.
In this case, parameter P-15 must be used to select the EXTFLT (external fault) setting for DI3, and parameter P-47 must be set to a value of 6 (*PtC-th*).

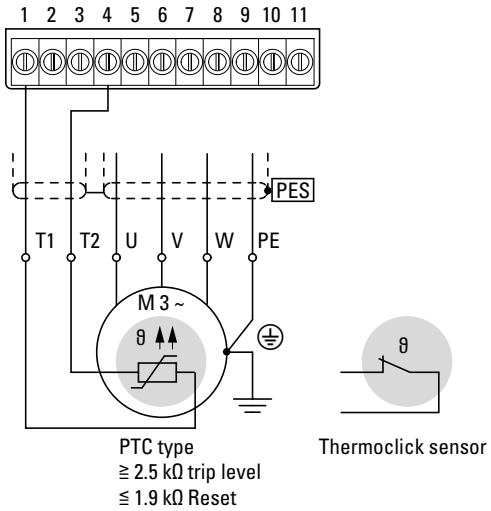

Figure 61: Thermistor connection

The thermistors and thermal switches used must be PTC-type units (PTC characteristic, positive temperature coefficient).
The tripping range must fall within a resistance value range of approximately 2.5 - 3 kΩ, while the reset range must fall within a range of 1.9 - 1 kΩ.

3.7 Block diagrams

The following block diagrams show all the connection terminals on a DC1 variable frequency drive and their functions when in their default settings.

3.7.1 DC1-1D…

Mains voltage U_{LN}: single-phase, 110 (-10 %) - 115 (+10 %) V, 50/60 Hz

Motor Voltage U_2: 3-phase, U_2 = 2 x U_{LN} (voltage doubling),

0 - 50/60 Hz (max. 500 Hz)

Size: FS1 and FS2 with IP20 degree of protection

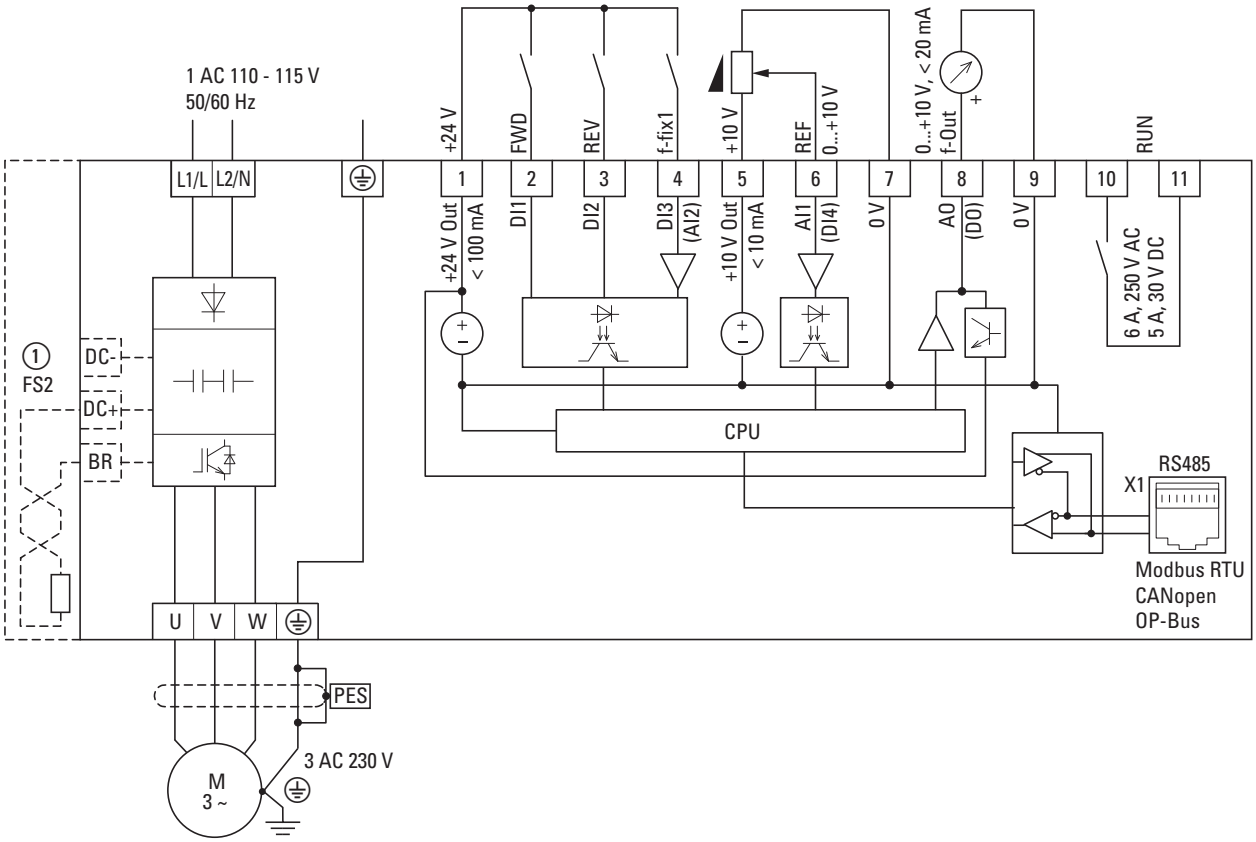

Figure 62: Block diagram DC1-1D…Nx-…

DC1-1D… variable frequency drives feature a voltage doubler in their internal DC link. When there is a connected voltage of 1 AC 110 - 115 V, a motor voltage of up to 3 AC 230 V will be output.

① Devices with a frame size of FS2 allow for DC link coupling (DC+, DC-) and connecting brake resistors (DC+, BR).

Brake resistor DX-BR3-100 can be inserted underneath the heat sink into the enclosure and electronically protected against overloads (P-34 = 1).

→ DC1-1D… variable frequency drives do not feature an internal radio interference suppression filter. An external radio interference suppression filter is required for operation as per EN 61800-3, → Section 7.4, “Radio interference suppression filter“, page 202.

3.7.2 DC1-12…

Mains voltage U_{LN}: single-phase, 200 (-10 %) - 240 (+10 %) V, 50/60 Hz

Motor voltage U_2: 3-phase, $U_2 = U_{LN}$, 0 - 50/60 Hz (max. 500 Hz)

Size: FS1, FS2 and FS3 with IP20 degree of protection

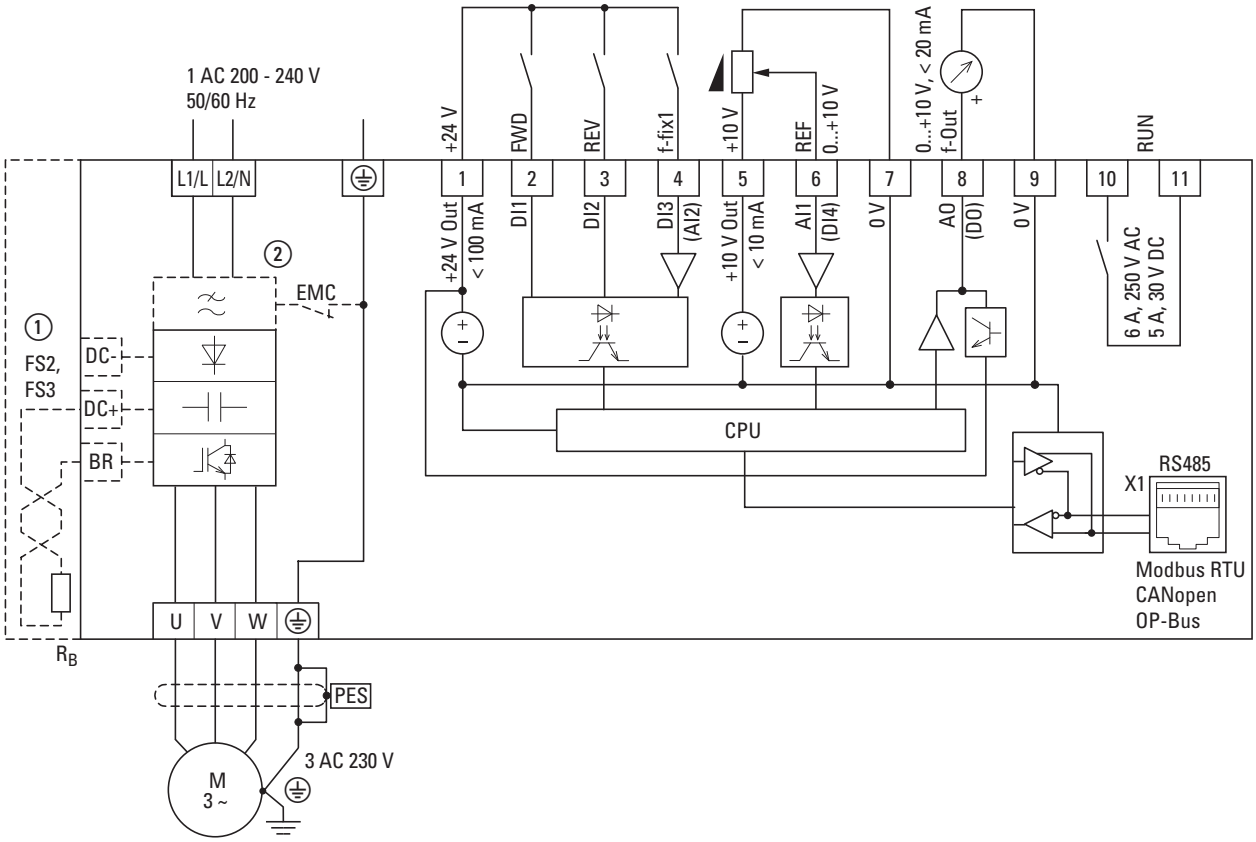

Figure 63: Block diagram DC1-12…

Variable frequency drive with single-phase supply system voltage and three-phase motor connection

① Devices with a frame size of FS2 or FS3 allow for DC link coupling (DC+, DC-) and connecting brake resistors (DC+, BR).

Brake resistor DX-BR3-100 can be inserted underneath the heat sink into the enclosure and electronically protected against overloads (P-34 = 1).

② DC1-12xxx**N**…: without radio interference suppression filter
DC1-12xxx**F**…: with built-in radio interference suppression filter

3.7.3 DC1-32…, DC1-34… (in FS1, FS2, FS3)

Mains voltage U_{LN}:

DC1-32…: 3-phase, 200 (-10 %) - 240 (+10 %) V, 50/60 Hz

DC1-34…: 3-phase, 380 (-10 %) - 480 (+10 %) V, 50/60 Hz

Motor voltage U_2: 3-phase, $U_2 = U_{LN}$, 0 - 50/60 Hz (max. 500 Hz)

Size: FS1, FS2 and FS3 with IP20 degree of protection

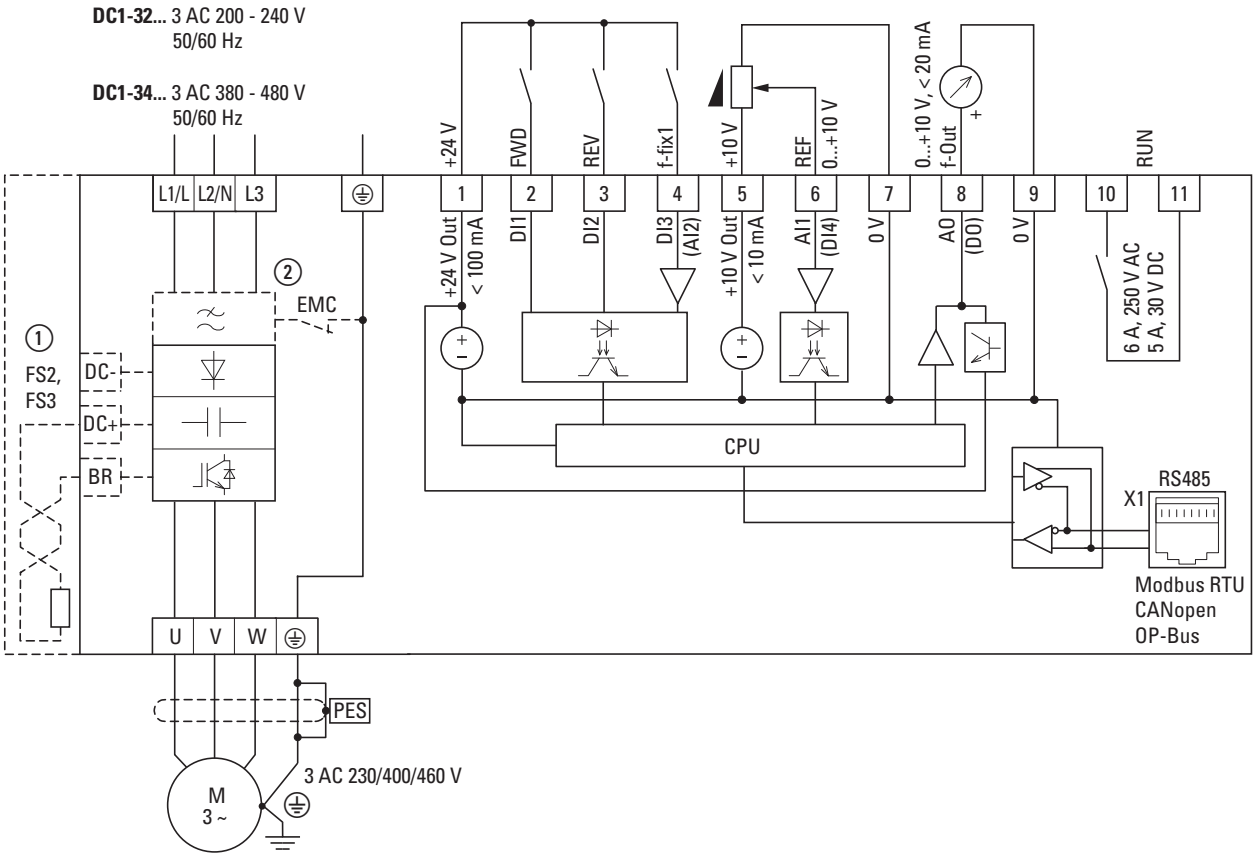

Figure 64: Block diagram DC1-32… and DC1-34… in frame sizes FS1, FS2 and FS3

Variable frequency drive with three-phase mains supply voltage and three-phase motor connection

① Devices with a frame size of FS2 or FS3 allow for DC link coupling (DC+, DC-) and connecting brake resistors (DC+, BR).

Brake resistor DX-BR3-100 can be inserted underneath the heat sink into the enclosure and electronically protected against overloads (P-34 = 1).

② DC1-32xxx**N**…, DC1-34xxx**N**…: without radio interference suppression filter
DC1-32xxx**F**…, DC1-34xxx**F**…: with built-in radio interference suppression filter

3.7.4 DC1-32…, DC1-34… (in FS4)

Mains voltage U_{LN}:

DC1-32…: 3-phase, 200 (-10 %) - 240 (+10 %) V, 50/60 Hz

DC1-34…: 3-phase, 380 (-10 %) - 480 (+10 %) V, 50/60 Hz

Motor voltage U_2: 3-phase, $U_2 = U_{LN}$, 0 - 50/60 Hz (max. 500 Hz)

Size: FS4 with IP20 degree of protection

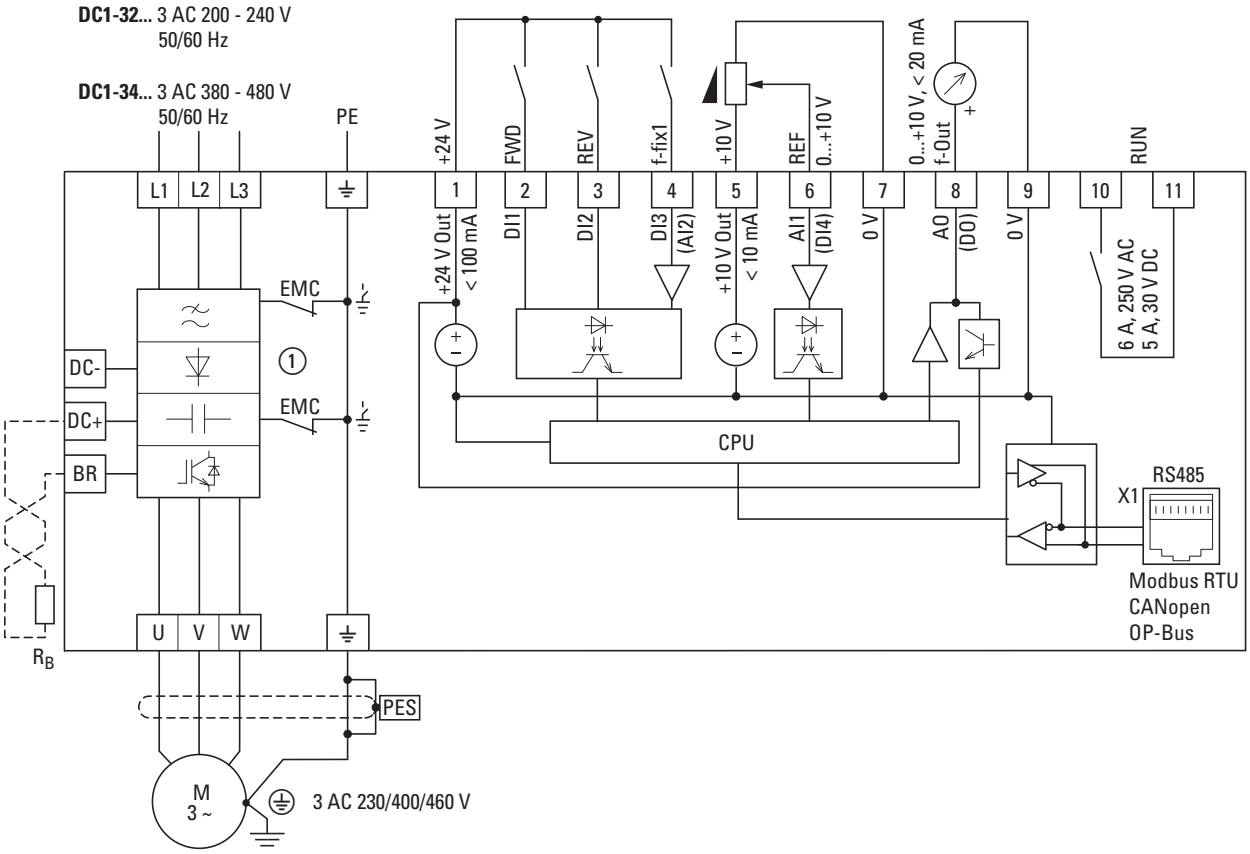

Figure 65: Block diagram DC1-32… and DC1-34… in frame size FS4

Variable frequency drive with three-phase mains supply voltage and three-phase motor connection

① The two EMC screws connect the mains-side capacitors in the internal radio interference suppression filter and the Y class capacitors to the earthing (PE).

3.7.5 DC1-1D…Nx-A6S…

Mains voltage U_{LN}: single-phase, 110 (-10 %) - 115 (+10 %) V, 50/60 Hz

Motor Voltage U_2: 3-phase, $U_2 = 2 \times U_{LN}$ (voltage doubling),

0 - 50/60 Hz (max. 500 Hz)

Size: FS1 and FS2 with IP66 degree of protection

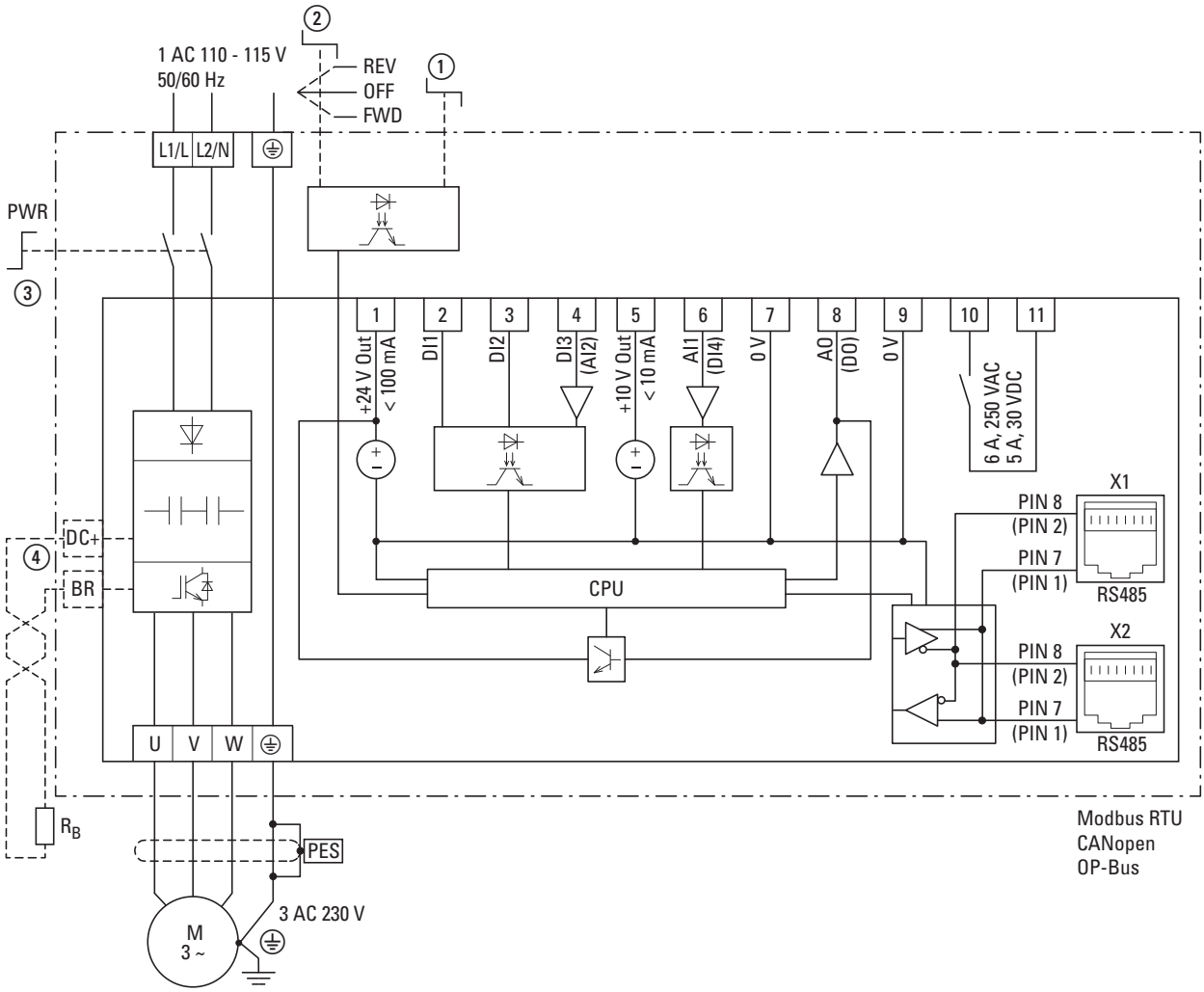

Figure 66: Block diagram DC1-1D…Nx-A6S…

DC1-1D…Nx-A6S… variable frequency drives with an IP66 degree of protection and local controls feature a voltage doubler in their internal DC link.

When there is a power supply of 1 AC 110 - 115 V, a motor voltage of up to 3 AC 230 V will be output.

① Reference value potentiometer (0 - f_{max})

② Operating direction selector switch
(FWD = Clockwise rotating field, REV = Counterclockwise rotating field)

③ Mains transfer switch (PWR = Power)

④ External brake resistors can be connected to devices with a frame size of FS2 or bigger.

→ DC1-1D variable frequency drives do not have an internal radio interference suppression filter.
An external radio interference suppression filter is required for operation as per EN 61800-3, → Section 7.4, "Radio interference suppression filter", page 202.

An external radio interference suppression filter should be installed in the immediate proximity of the variable frequency drive. In order to have an IP66 degree of protection, DX-EMC… radio interference suppression filters must be installed inside an enclosure (IP66). In this case, the connection to the variable frequency drive will require a screened cable with a screen braid that is terminated at both ends to the protective earth (PES) across a large area.

3.7.6 DC1-1D…Nx-A66…

Mains voltage U_{LN}: single-phase, 110 (-10 %) - 115 (+10 %) V, 50/60 Hz

Motor Voltage U_2: 3-phase, U_2 = 2 x U_{LN} (voltage doubling),

0 - 50/60 Hz (max. 500 Hz)

Size: FS1 and FS2 with IP66 degree of protection

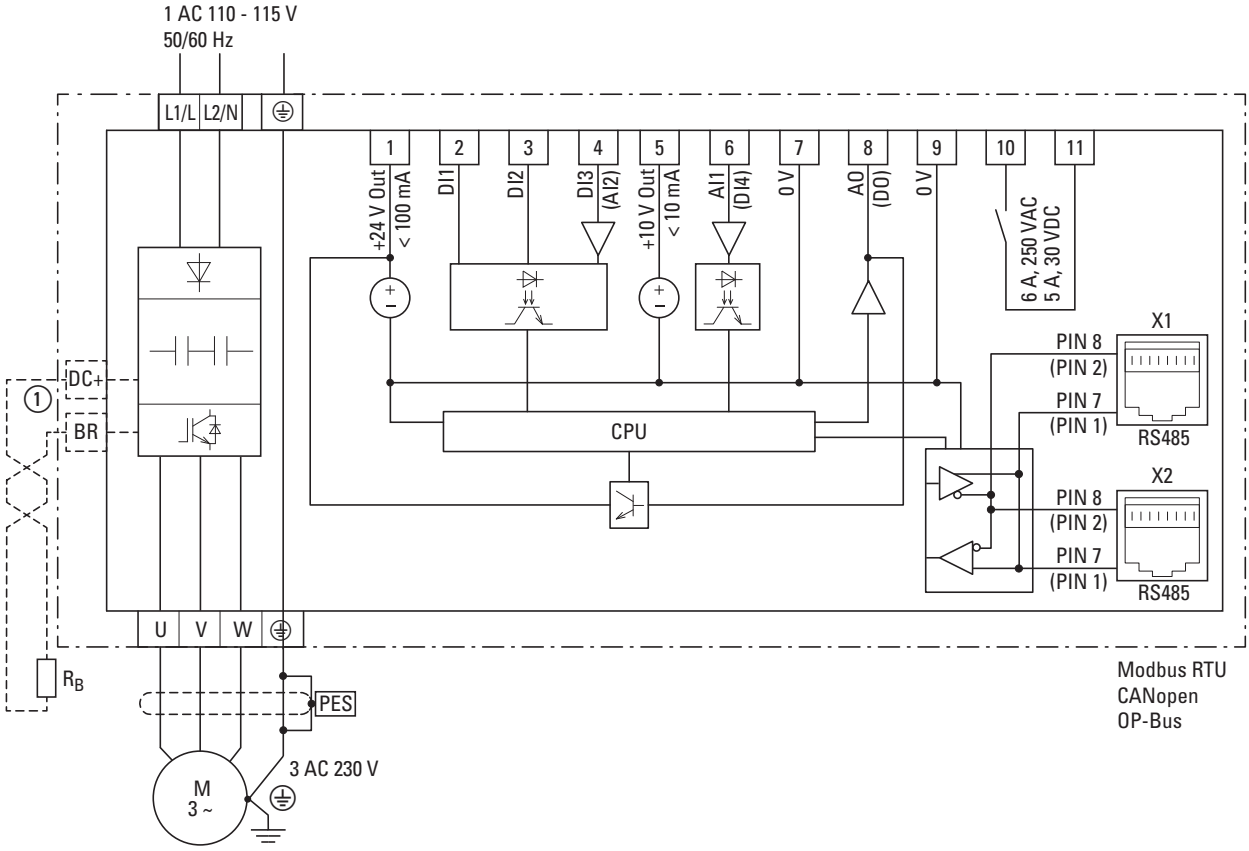

Figure 67: Block diagram DC1-1D…Nx-A66…

When there is a power supply of 1 AC 110 - 115 V, a motor voltage of up to 3 AC 230 V will be output.

External braking resistances can be connected to devices with a size of FS2 or bigger.

① Frame size FS2 with connection for external brake resistor

→ DC1-1D variable frequency drives do not have an internal radio interference suppression filter. An external radio interference suppression filter is required for operation as per EN 61800-3, → Section 7.4, "Radio interference suppression filter", page 202.

3.7.7 DC1-12…-A6S…

Mains voltage U_{LN}: single-phase, 200 (-10 %) - 240 (+10 %) V, 50/60 Hz

Motor voltage U_2: 3-phase, $U_2 = U_{LN}$, 0 - 50/60 Hz (max. 500 Hz)

Size: FS1, FS2 and FS3 with IP66 degree of protection

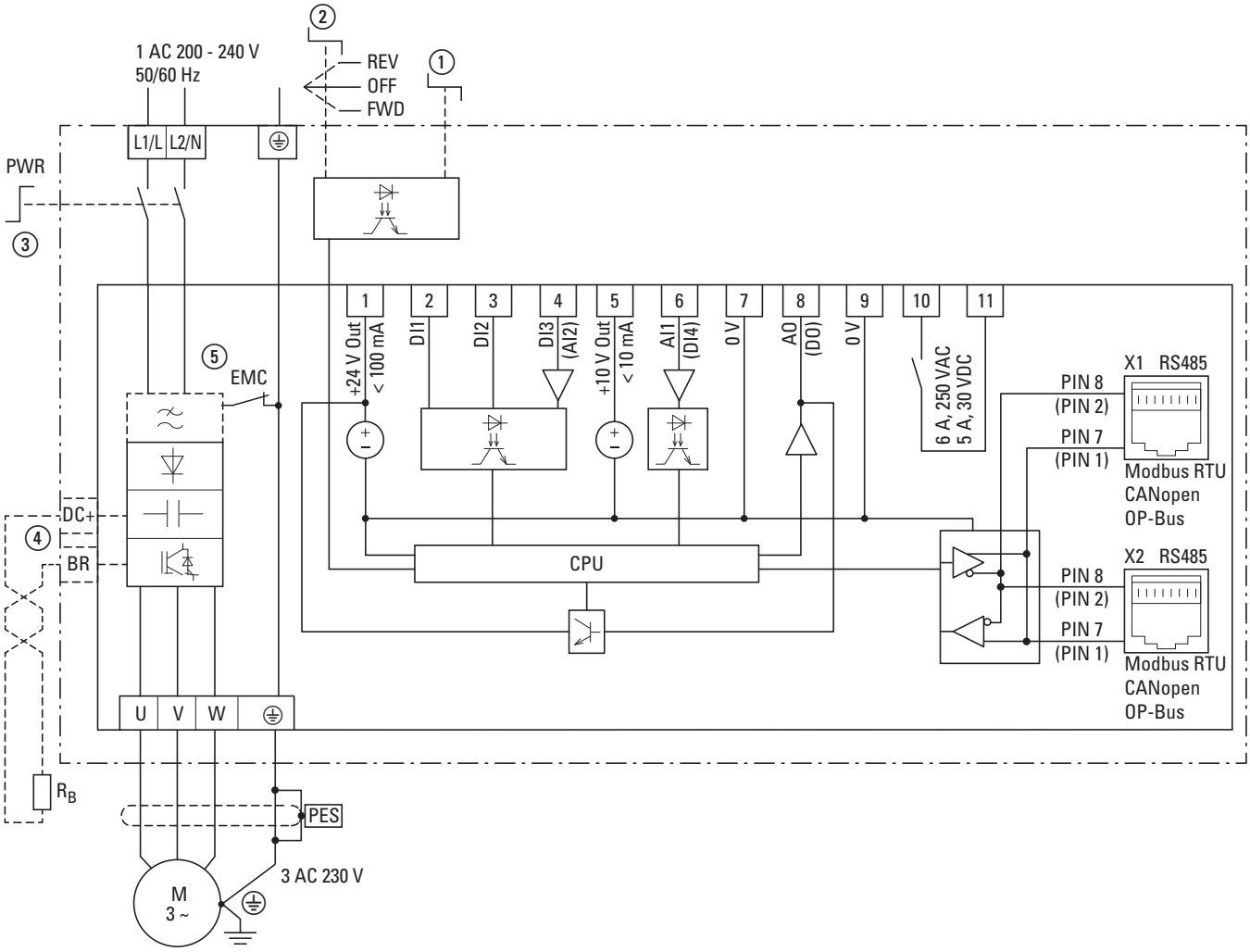

Figure 68: Block diagram DC1-12…-A6S…

Variable frequency drive with IP66 degree of protection, local controls, single-phase mains supply voltage, and three-phase motor connection

① Reference value potentiometer (0 - f_{max})

② Operating direction selector switch
(FWD = Clockwise rotating field, REV = Counterclockwise rotating field)

③ Mains transfer switch (PWR = Power)

④ Frame sizes FS2 and FS3 with connection for external brake resistors

⑤ DC1-12xxx**N**…: without radio interference suppression filter
DC1-12xxx**F**…: with built-in radio interference suppression filter

3.7.8 DC1-12…-A66…

Mains voltage U_{LN}: single-phase, 200 (-10 %) - 240 (+10 %) V, 50/60 Hz

Motor voltage U_2: 3-phase, $U_2 = U_{LN}$, 0 - 50/60 Hz (max. 500 Hz)

Size: FS1, FS2 and FS3 with IP66 degree of protection

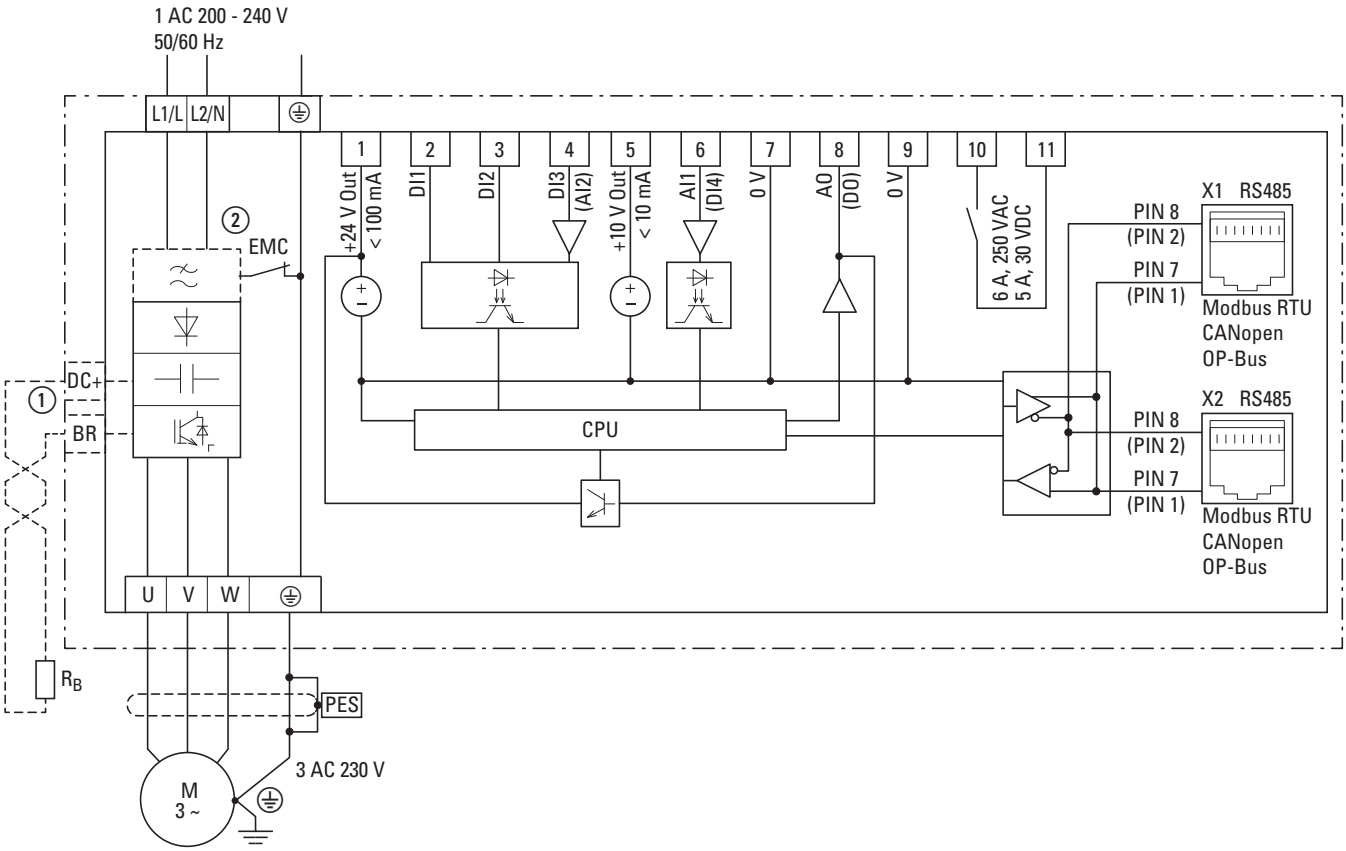

Figure 69: Block diagram DC1-12…-A66…

Variable frequency drive with IP66 degree of protection, local controls, single-phase mains supply voltage, and three-phase motor connection

① Frame sizes FS2 and FS3 with connection for external brake resistors

② DC1-12xxx**N**…: without radio interference suppression filter
DC1-12xxx**F**…: with built-in radio interference suppression filter

3.7.9 DC1-32…-A6S…, DC1-34…-A6S…

Mains voltage U_{LN}:

DC1-32…: 3-phase, 200 (-10 %) - 240 (+10 %) V, 50/60 Hz

DC1-34…: 3-phase, 380 (-10 %) - 480 (+10 %) V, 50/60 Hz

Motor voltage U_2: 3-phase, $U_2 = U_{LN}$, 0 - 50/60 Hz (max. 500 Hz)

Size: FS1, FS2, FS3, FS4 with IP66 degree of protection

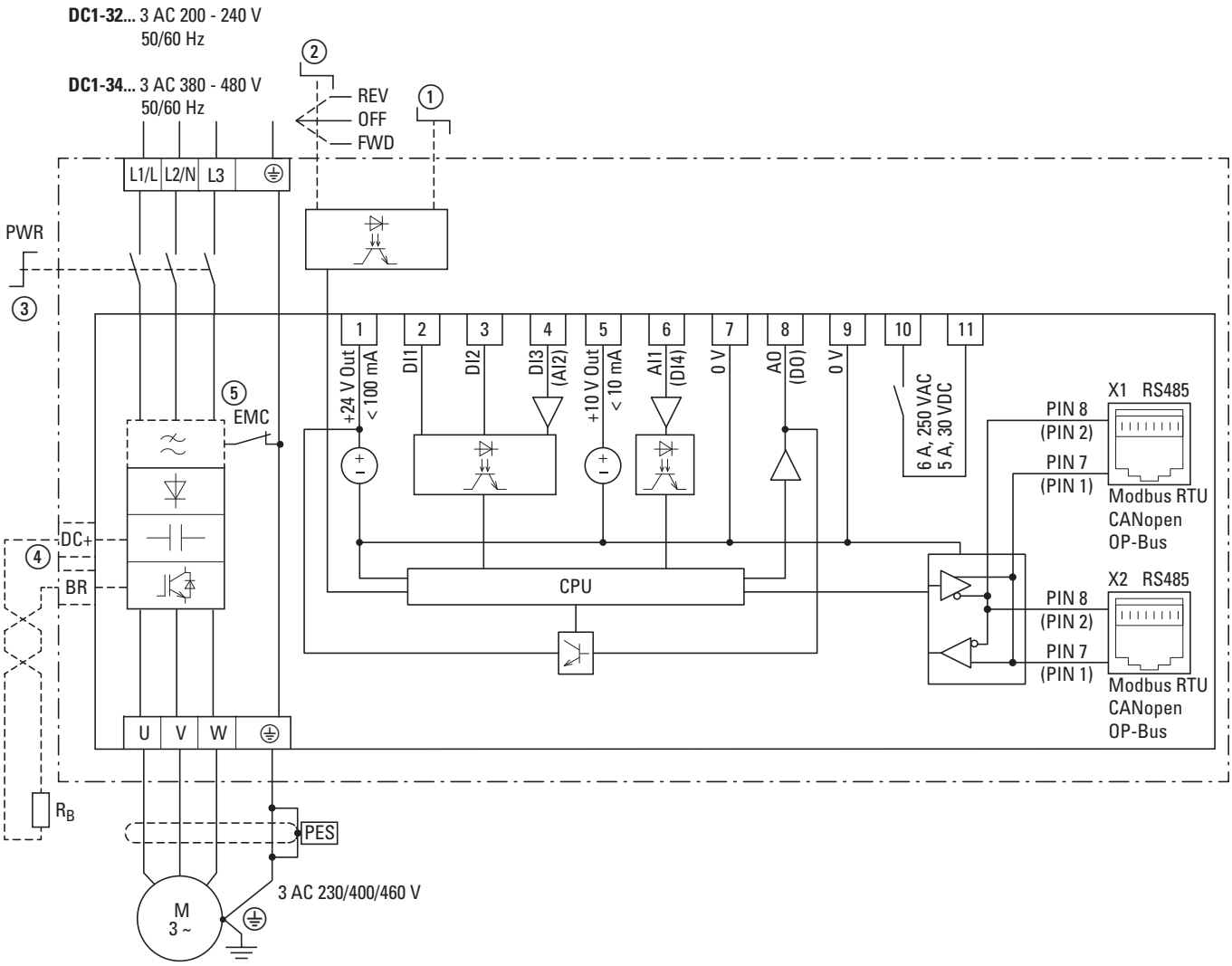

Figure 70: Block diagram DC1-32…-A6S…, DC1-34…-A6S…

Variable frequency drive with IP66 degree of protection, local controls, three-phase mains supply voltage, and three-phase motor connection

① Reference value potentiometer (0 - f_{max})

② Operating direction (FWD = Clockwise rotating field, REV = Counterclockwise rotating field)

③ Mains transfer switch (PWR = Power)

④ Frame sizes FS2, FS3 and FS4 with connection for external brake resistors

⑤ DC1-3xxxx**N**…: without radio interference suppression filter
DC1-3xxxx**F**…: with built-in radio interference suppression filter

3.7.10 DC1-32…-A66…, DC1-34…-A66…

Mains voltage U_{LN}:

DC1-32…: 3-phase, 200 (-10 %) - 240 (+10 %) V, 50/60 Hz

DC1-34…: 3-phase, 380 (-10 %) - 480 (+10 %) V, 50/60 Hz

Motor voltage U_2: 3-phase, $U_2 = U_{LN}$, 0 - 50/60 Hz (max. 500 Hz)

Size: FS1, FS2, FS3, FS4 with IP66 degree of protection

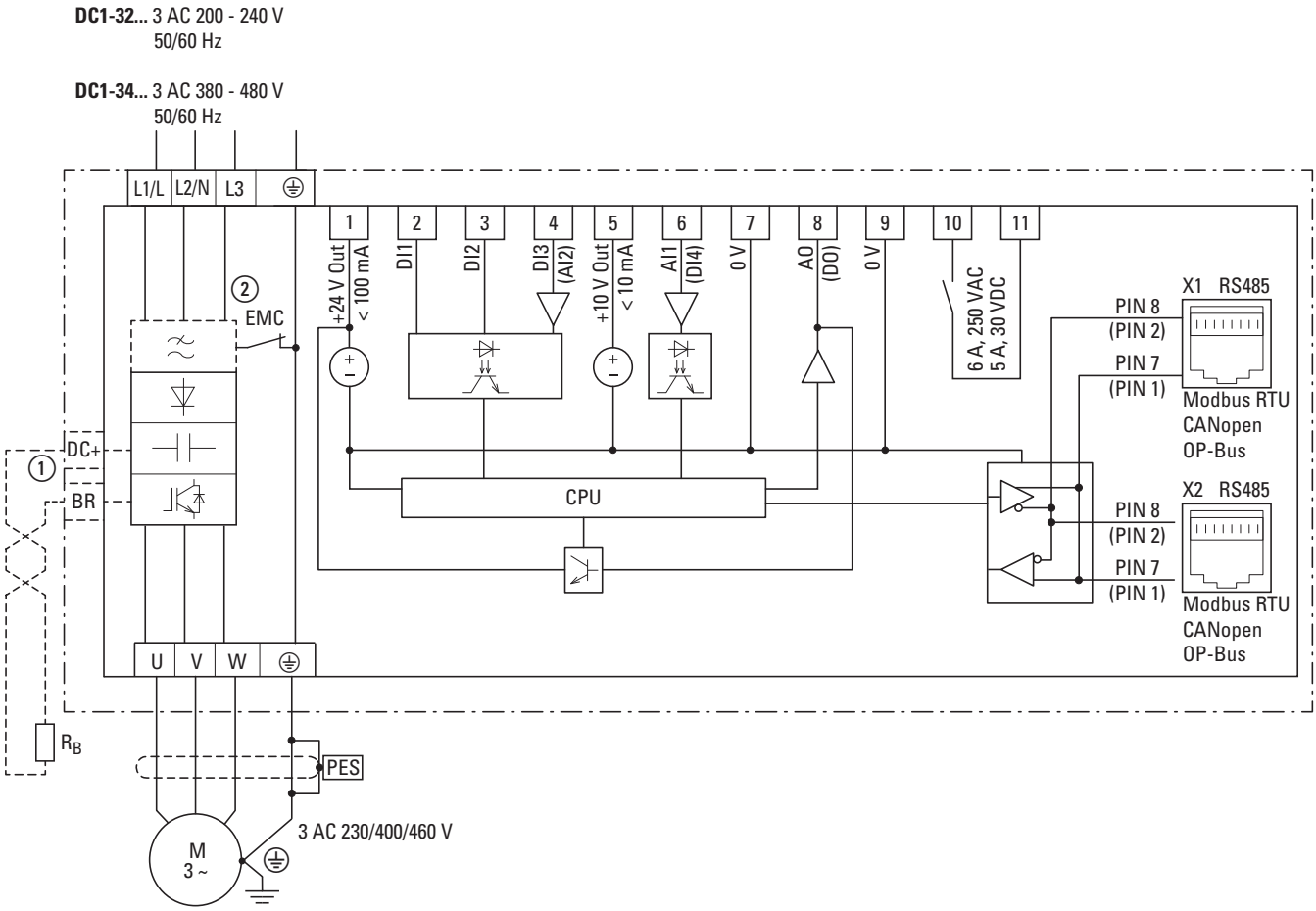

Figure 71: Block diagram DC1-32…-A66…, DC1-34…-A66…

① Frame sizes FS2, FS3 and FS4 with connection for external brake resistors

② DC1-3xxxx**N**…: without radio interference suppression filter
DC1-3xxxx**F**…: with built-in radio interference suppression filter

3.8 Insulation testing

The variable frequency drive of the DC1 series are tested, delivered and require no additional testing.

CAUTION

On the control signal and the connection terminals of the variable frequency drive, no leakage resistance tests are to be performed with an insulation tester.

CAUTION

Wait at least 5 minutes after switching the supply voltage off before you disconnect one of the connection terminals (L1/L, L2/N, L3, DC-, DC+, BR) of the variable frequency drive.

If insulation testing is required in the power circuit of the PDS, you must consider the following measures.

Testing the motor cable insulation

- Disconnect the motor cable from the connection terminals U, V and W of the variable frequency drive and from the motor (U, V, W). Measure the insulation resistance of the motor cable between the individual phase conductors and between the phase conductor and the grounding conductor.

The insulation resistance must be greater than 1 MΩ.

Testing the mains cable insulation

- Disconnect the power cable from the mains supply network and from the connection terminals 1/L, L2/N and L3 of the variable frequency drive. Measure the insulation resistance of the mains cable between the individual phase conductors and between each phase conductor and the protective conductor.

The insulation resistance must be greater than 1 MΩ.

Testing the motor insulation

- Disconnect the motor cable from the motor (U, V, W) and open the bridge circuits (star or delta) in the motor terminal box.
  Measure the individual motor windings' insulation resistance. The measurement voltage must at least match the rated operating voltage of the motor but is not to exceed 1000 V.

The insulation resistance must be greater than 1 MΩ.

→ Consider the notes from the motor manufacturer in testing the insulation resistance.

3.9 Protection against electric shock

Ensuring protection against electric shock when using DC1…E1 variable frequency drives, as per IEC/EN 61800-5-1

Manufacturer's declaration for the initial verification as per IEC/HD 60364-6 (DIN VDE 0100-600 (VDE 0100-600)) and for periodic testing as per EN 50110-1 (DIN VDE 0105-100 (VDE 0105-100))

Fault protection in accordance with IEC/HD 60364-4-41 (DIN VDE 0100-410 (VDE 0100-410)) for the output-side circuits of the aforementioned apparatus is guaranteed provided that the following requirements are met:

- The installation instructions in this documentation have been observed.
- The applicable standards in the IEC/HD 60364 (DIN VDE 0100 (VDE 0100) series have been observed.
- The continuity of all associated protective conductors and equipotential bonding conductors, including the corresponding connection points, has been ensured.

Provided that the above requirements are met, the aforementioned apparatus meets the requirements in IEC/HD 60364-4-41 (DIN VDE 0100-410 (VDE 0100-410):2007-06, section 411.3.2.5) when using the "automatic power supply shutdown" protective measure.

The note is based on the following information:

In the event of a short-circuit with negligible impedance to a protective conductor or to earth, the aforementioned apparatus will reduce the output voltage within a time as required in table 41.1 or within 5 seconds – depending on the applicable scenario – as per IEC/HD 60364-41 (DIN VDE 0100-410; VDE 0100-410):2007-06).

4 Operation

4.1 Checklist for commissioning

Before placing the frequency converter into operation, use the checklist below to make sure that all the following requirements are met:

No.	Activity	Note
1	Mounting and wiring have been carried out in accordance with the corresponding instruction leaflet (→ IL04020009Z, IL04020024ZU, IL04020059ZU).	
2	All wiring and line section leftovers, as well as all the tools used, have been removed from the variable frequency drive's proximity.	
3	All connection terminals in the power section and in the control section were tightened with the specified torque.	
4	The lines connected to the output terminals (U, V, W, DC+, DC-, BR) of the variable frequency drive are **not** short-circuited and are **not** connected to earth (PE).	
5	The variable frequency drive has been earthed properly (PE).	
6	All electrical connections in the power section (L1/L, L2/N, L3, U, V, W, DC+, DC-, BR, PE) have been connected properly while taking into account the degree of protection and have been dimensioned in line with the corresponding requirements.	
7	Each single phase of the supply voltage (L or L1, L2, L3) is protected with a fuse.	
8	The variable frequency drive and the motor are adapted to the mains voltage. (→ Section 1.4.1, „Rated operational data on the nameplate", page13, connection type (star, delta) of the motor tested).	
9	The quality and volume of cooling air are in line with the environmental conditions required for the variable frequency drive and the motor.	
10	All connected control cables comply with the corresponding stop conditions (e.g., switch in OFF position and setpoint value = zero).	
11	The parameters that were preset at the factory have been checked with the list of parameters (→ Section , „Laufende K/F 1").	
12	The effective direction of a coupled machine will allow the motor to start.	
13	All emergency switching off functions and safety functions are in an appropriate condition.	

4.2 Operational hazard warnings

Please observe the following notes.

DANGER

Commissioning is only to be completed by qualified technicians.

DANGER

Hazardous voltage!

The safety instructions on page I (→ Section , „Before commencing the installation“) must be followed.

DANGER

The components in the variable frequency drive’s power section are energized if the supply voltage (mains voltage) is connected. For instance: L1/L, L2/N, L3, DC+, DC-, BR, U/T1, V/T2, W/T3 power terminals.
The control signal terminals are isolated from the line power potential.
There can be a dangerous voltage on the relay terminals (10, 11) even if the variable frequency drive is not being supplied with line voltage (e.g., integration of relay contacts in control systems with voltage > 48 V AC / 60 V DC).

DANGER

The components in the variable frequency drive’s power section remain energized up to five (5) minutes after the supply voltage has been switched off (intermediate circuit capacitor discharging time).

Pay attention to hazard warnings!

DANGER

Following a shutdown (fault, mains voltage off), the motor can start automatically (when the supply voltage is switched back on) if the automatic restart function has been enabled (→ parameters P-31).

NOTICE

Any contactors and switching devices on the line side are not to be opened during motor operation. Inching operation using the mains contactor is not permitted.

Contactors and switchgear (repair and maintenance switches) on the motor side must not be opened while the motor is in operation.
Inching operation of the motor with contactors and switching devices in the output of the variable frequency drive is not permissible.

NOTICE

Make sure that there is no danger in starting the motor. Disconnect the driven machine if there is a danger in an incorrect operating state.

→ If motors are to be operated with frequencies higher than the standard 50 or 60 Hz, then these operating ranges must be approved by the motor manufacturer. The motors could be damaged otherwise.

4.3 Commissioning with control signal terminals (default settings)

DC1 variable frequency drives come pre-configured for their rated mains voltage and motor output. Once the corresponding motor and mains voltage are connected, these drives allow for direct operation via their control signal terminals.

Simplified connecting example

DC1 with IP20 degree of protection	Terminal	Designation	
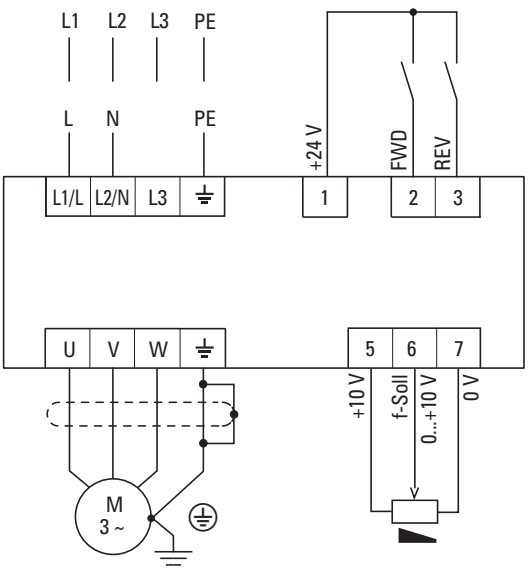	L1/L	Single-phase mains connection (DC1-1D…, DC1-12…)	Three-phase mains connection (DC1-32…, DC1-34…)
	L2/N		
	L3	–	
	⏚	Ground connection	
	1	Control voltage +24 V (output, maximum 100 mA)	
	2	FWD, Start release clockwise rotating field	
	3	REV, Start release left rotating field	
	U	Connection for three-phase ac motor (three-phase motor)	
	V		
	CO		
	⏚		
	5	Reference voltage +10 V (Output, maximum 10 mA)	
	6	Frequency reference value f-Set (Input 0 – +10 V)	
	7	Reference potential (0 V)	

The potentiometer should have a fixed resistance (connection to control terminals 5 and 7) of at least 1 kΩ and up to a maximum of 10 kΩ.
A standard fixed resistance of 4.7 kΩ is recommended.

→ Make sure that the enable contacts (FWD/REV) are open before switching on the mains voltage.

When the specified supply voltage is applied at the mains connection terminals (L1/L, L2/N, L3), the switched-mode power supply unit (SMPS) in the internal DC link will be used to generate the control voltage and light up the 7-segment LED display (STOP). At this point, the variable frequency drive will be ready for operation (correct operating status) and in Stop mode.
The start enable signal is sent by activating one of the digital inputs with +24 V:

- Terminal 1: FWD = Clockwise rotating field (Forward Run)
- Terminal 2: REV = Counterclockwise rotating field (Reverse Run)

The FWD and REV control commands are interlocked (exclusive OR) and require a rising voltage edge.

The frequency is shown with a minus sign with a start release with a left rotating field (REV).

- You can now set the output frequency (0 - 50 Hz) and, as a result, the speed of the connected three-phase motor (0 - n_{Motor}), by using the potentiometer via terminal 6 (0 - +10 V proportional voltage signal). Output frequency changes will be delayed based on the specified acceleration and deceleration times. When using the device's default settings, these times will be set to 5 seconds.

The acceleration and deceleration ramps specify the time change for the output frequency: from 0 to f_{max} (WE = 50 Hz) or from f_{max} back to 0.

Figure 72 shows an example illustrating the time response when a RUN enable signal (FWD or REV) is switched on while the maximum setpoint voltage (+10 V) is being applied at control signal terminal 6. The speed of the motor follows the output frequency, depending on the load torque and moment of inertia (slip), from zero to n_{max}.

The acceleration time is set in parameter P-03.

If the enable signal (FWD or REV) is switched off during operation, the inverter will be disabled immediately (STOP) and the output frequency will be set to zero. This will cause the motor to coast to a stop – see ① below.

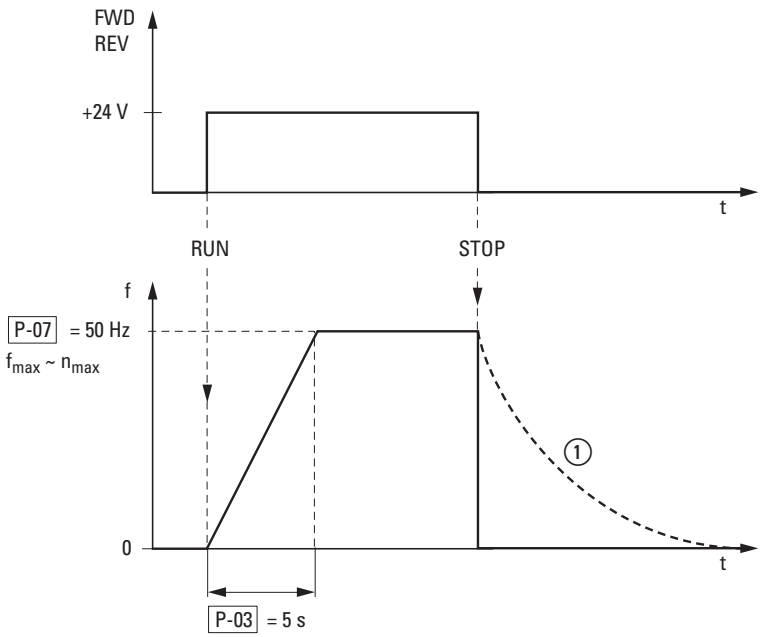

Figure 72:Start-Stop command with maximum reference voltage, acceleration ramp 5 s

4.4 Commissioning with local controls

The variable frequency drives of the DC1-...-A6S... series with local controls are factory-set and internally wired. They can be started directly using the local controls when the rated motor output for the mains voltage is connected.

→ Make sure that the switches are open before switching on the mains voltage.

When the specified supply voltage is applied at the mains connection terminals (L1/L, L2/N, L3) and the main switch on the mains side is switched on, the switched-mode power supply unit (SMPS) in the DC link will be used to generate the control voltage and the 7-segment LED display will light up (StoP). At this point, the variable frequency drive will be ready for operation (correct operating status) and in Stop mode. The start enable signal can then be issued by selecting a rotating field direction:

- FWD = Clockwise rotating field (Forward Run)
- REV = Counterclockwise rotating field (Reverse Run)

At this point, the output frequency (0 - 50 Hz), and the speed of the connected three-phase motor (0 - n_{Motor}) as a result, can be adjusted by using the internal setpoint potentiometer. Output frequency changes will be delayed based on the specified acceleration and deceleration times. When using the device's default settings, these times will be set to 5 seconds.

Example

Table 20: Selector switch for DC1-…A6S…

Switch position			Parameter		Description
	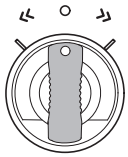		P-12	P-15	
REV	STOP	FWD	0	5	**Factory Default Configuration** Run Forward or Reverse with speed controlled from the local POT
STOP	STOP	FWD	0	0, 7	Run forward with speed controlled form the local POT Run Reverse – Disabled
Preset Speed 1	STOP	FWD	0	1	Run Forward with speed controlled from the local POT Preset Speed 1 provides a 'Jog' Speed set in P-20
REV	STOP	FWD	0	6, 8	Run Forward or Reverse with speed controlled from the local POT
Run in Auto	STOP	Run in Hand	0	4	Run in Hand – Speed controlled from the local POT Run in Auto – Speed controlled using Analog input 2 e.g. from PLC with 4-20mA signal.
Run in Speed Control	STOP	Run in PI Control	5	1	In Speed Control the speed is controlled from the local POT In PI Control, Local POT controls PI set point.
Run in Preset Speed Control	STOP	Run in PI Control	5	0, 2, 4, 5, 8, 9, 10, 11, 12	In Preset Speed Control, P-20 sets the Preset Speed In PI Control, POT can control the PI set point (P-44 = 1).
Run in Hand	STOP	Run in Auto	3	6	Hand – Speed controlled from the local POT Auto – Speed Reference from Modbus
Run in Hand	STOP	Run in Auto	3	3	Hand – Speed reference from Preset Speed 1 (P-20) Auto – Speed Reference from Modbus

FWD = Forward Run
REV = Reverse Run

5 Parameter

5.1 Parameter groups

Table 21: Parameter groups

Parameter group	Value Range	Part no.	Access rights
Display values	P00-01 - P00-20	DC1-…	ro
	P00-21 - P00-50	DC1-…E1	ro
Basic parameters	P-01 – P-14	DC1-…	rw
Expansion	P-15 – P-55	DC1-…	rw
Expansion, version 1	P-60 – P-70	DC1-…E1	rw

Parameter P-14 is used to control access to all parameter groups:

- P-14 = P-37 (default setting: 101): enables access to the extended parameter set (up to P-55 and up to P00-20)
- P-14 = P-37 + 100 (default setting: 201): enables access to the extended parameter set for version 1 (up to P-70 and up to P00-50)

→ The graphic on the following page (“Menu structure”) shows how to switch between the parameter groups.

Default setting

By default (= unit as supplied), only parameter group 1 (Level 1 “Basic”) is accessible.

“Extended” and “Advanced” parameter group

The “Extended” parameter group (Level 2) can be accessed by entering a password in parameter P-14.

The default password is:

- Access to the “Extended” parameter group (Level 2): 101
  Users can change this password as required.
- Change the password for the “Extended” parameter group by changing the value of parameter P-37
- “Advanced” parameter group (Level 3): Access the parameter group by entering the password for Level 2 (P-37 + 100).

Table 22: Menu structure

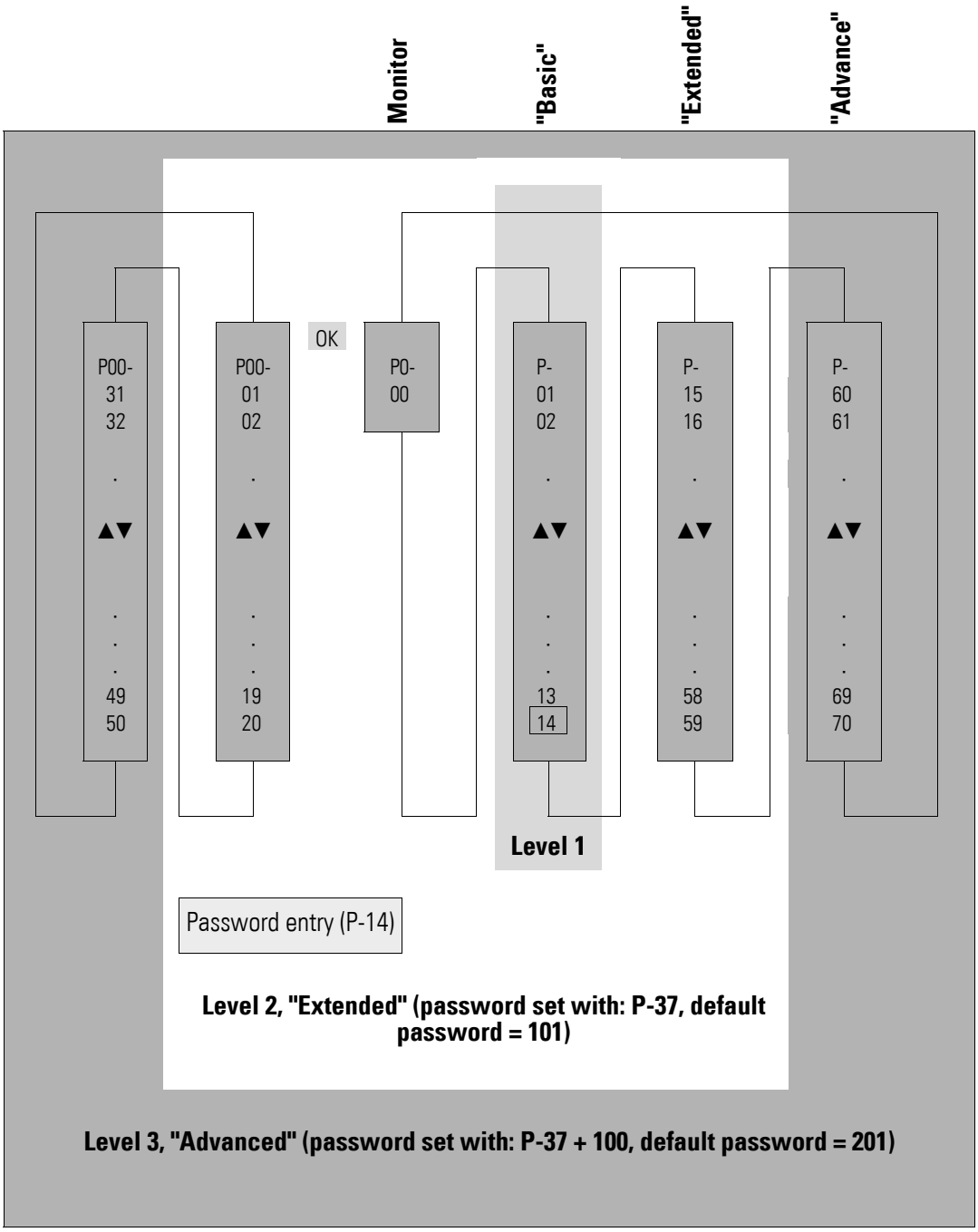

5.2 Keypad

The keypad can be used to configure the DC1 variable frequency drive's parameters and monitor its operation.

5.2.1 Operating unit elements

The following figure shows the elements of the DC1 variable frequency drive integrated operating unit.

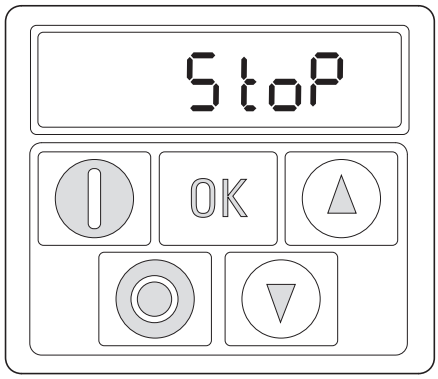

Display (7-digital LEDs)

Push buttons

Figure 73:Operating unit view (example DC1-…-A20…)

→ If you intend to use an external keypad and/or a parameter copying stick with the DC1-…E1 variable frequency drive, please note that only models DX-KEY-LED**2** and DX-COM-STICK**3** will work.

DX-KEY-OLED can be used, but requires an update first.

→ The integrated keypad on DC1 devices and the (optional) external DX-KEY-**LED2** keypad feature a six-digit 7-segment LED display.
The optional DX-KEY-**OLED** keypad is a multi-language cleartext display unit (OLED = Organic light-emitting diode).
It can be used in conjunction with DC1 variable frequency drives. The buttons on both keypads work the exact same way.
The additional **Hand** and **Auto** buttons on the DX-KEY-OLED keypad do not do anything in this case.

→ On OLED displays, languages can be selected by pressing **START** + ▲ simultaneously.
Display: **Select Language**.
The display language can be changed with the ▲ and ▼ arrow keys. The selected language setting can then be saved by pressing the **OK** button.

If you want to use the **START** and **STOP** buttons to control the DC1 variable frequency drive, the corresponding setting needs to be enabled in parameter P-12 ("Local process data source") regardless of which keypad type or model is being used (integrated DX-KEY-LED or external DX-KEY-OLED)

Table 23: Keypad buttons

Button	Attribute ID	Explanation
OK	**OK**	• Navigating in parameter mode • Opens and closes the parameter interface (press the button and hold it down for more than two seconds) • Saves parameter changes • Changes the value being displayed: A, rpm, etc. (real-time information)
	START	• Starts the variable frequency drive[1)] • Changes the operating direction[2)] if the motor is running
	STOP	• Stops the variable frequency drive[1)] • Reset – Resetting after fault message
	UP	• Increases the speed[1)] • Increment numeric value or parameter number
	DOWN	• Decreases the speed[1)] • Decrement numeric value or parameter number

Note:
1) P-12 = 1 (one operating direction) or P-12 = 2 (two operating directions);
The operating direction will be reversed when the START button is pressed
2) Only if P-12 = 2

5.2.2 Adjust parameters

Table 24: Modify parameters

Commands	Description
OK	Press the **OK** button and hold it down for two seconds in order to access the parameter interface. → The display will show the parameter that was last used.
▲ ▼	Use the ▲ and ▼ buttons to select a parameter.
OK	Press the **OK** button. The value of the selected parameter can be changed.
▲ ▼	Use the ▲ and ▼ buttons to change the parameter's value.
OK	Press the **OK** button to confirm the parameter value change. As soon as the parameter is displayed, the value will have been saved. Press the **OK** button and hold it down for two seconds in order to exit the parameter interface (display: "StoP").

5.2.3 Resetting Parameters (RESET)

Table 25: Resetting parameters (RESET)

Commands	Description
Reset to default settings	
▲ + ▼ + STOP	Press the ▲ and ▼ and STOP buttons and hold them down for two seconds. **→ All parameters will be restored to their default settings.** The display will show P-dEF.
Resetting after a fault	
STOP	Press the **STOP** button to reset a fault message. The display will show StoP.

5.2.4 Extended parameter set

Table 26: Enabling and disabling access to the extended parameter set

Commands	Description
Enabling access to the extended parameter set	
OK	Press the **OK** button and hold it down for two seconds in order to access the parameter interface The display will show the parameter that was last used.
▲ ▼	Use the ▲ and ▼ buttons to select parameter P-14
OK	Press the **OK** button.
▲ ▼	Use the ▲ and ▼ buttons to enter the password set with P-37 (default setting: 101)
OK	Press the **OK** button to confirm The extended parameter set (parameters > P-14 and display values P00-…) will now be available.
Disabling access to the extended parameter set	
▲ ▼	Use the ▲ and ▼ buttons to set a value for P-14 that does not match the password (P-37).
OK	Press the **OK** button to confirm Only the “basic parameters”, P-01 to P-14, will be accessible now.

→ The extended parameter set (default setting for P-37 = 101) contains parameters P-01 to P-58.
Additional parameters P-60 to P-70 can be configured for specific applications. The corresponding password is 201 in parameter P-14 (value of P37 + 100).

5.2.5 “Monitor” submenu

Table 27: “Monitor” submenu

Commands	Description
Open the “Monitor” submenu	
	The “Extended” parameter group (Level 2) must be enabled with parameter P-14.
	Use the ▲ and ▼ buttons to select parameter P-00.
OK	Press the **OK** button. → The submenu with P00-01 to P00-30 will now be accessible. **Note:** The parameter range from P00-01 to P00-50 is available in the menu for “Advanced” users (Level 3).
Navigate within the “Monitor” submenu	
	Use the ▲ and ▼ buttons to select parameters P00-01 to P00-30 (or P00-01 to P00-50 in the case of level 3).
OK	Press the **OK** button to confirm.
Exit the “Monitor” submenu	
OK	Press the **OK** button (several times if necessary). → Only parameter P-00 will be available now.

5.2.6 Control via the keypad

Table 28: Control via the keypad

Button	Command	Explanation
OK	**OK**	P-12 = 1 or = 2 • P-12 = 1: one operating direction (FWD) • P-12 = 2: two operating directions (FWD/REV)
	START	Starts the variable frequency drive
		▲ Increase speed ▼ Decrease speed
	START	Changes the operating direction if the motor is running. **Note:** Only if P-12 = 2
OK	**OK**	Changes the value being displayed: A, rpm, etc.
	STOP	Stops the variable frequency drive.

Note:
In this mode, a high-level signal must be applied at terminal 2 (DI1) as an enable signal for the DC1 variable frequency drive.

5.3 Help cards

DC1 variable frequency drives come with two help cards that show the most important control connections and parameters. This makes it possible to quickly and easily commission the drives with their default settings when using the rated motor output ("out-of-the-box operation").

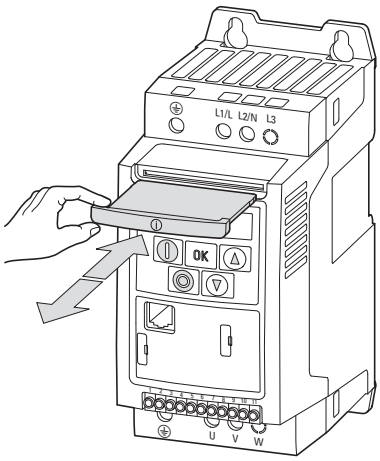

Figure 74:Help cards in units with an IP20

In the case of devices with an IP20 degree of protection, the help cards will be inserted in place above the keypad.

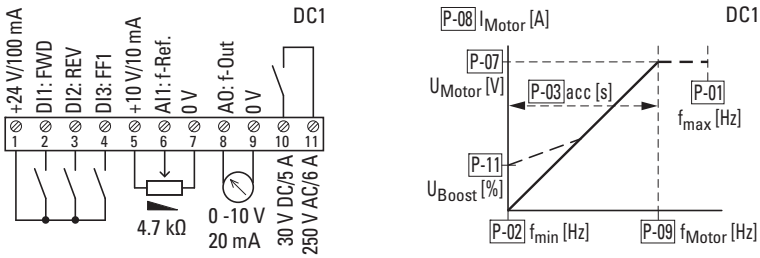

Figure 75:Help cards

For the devices DC1...OE1 (IP66) there is a QR Code in the cover. It links to the Eaton website **eaton.com/documentation**. All relevant documents can be downloaded there.

Figure 76:QR Code

Table 29: Control connections with default settings (help card)

Control signal terminal	Signal	Description	
1	+24 V	Control Voltage	Output voltage
2	DI1	Digital Input 1	FWD = clockwise rotating field enable (U → V → W)
3	DI2	Digital input 2	REV = anticlockwise rotating field enable (W → V → U)
4	DI3	Digital Input 3	FF1 = Switch from analog setpoint AI1 (control signal terminal 6) to fixed frequency value f-Fix1 in parameter P-20 (15 Hz)
5	+10V	Reference voltage	Output voltage
6	AI1	Analog Input 1	Reference voltage: 0 - 10 V = 0 - 50 Hz (Rotating field frequency)
7	0 V	Reference potential	for +24 V and + 10 V, 0 V = Control signal terminal 9
8	AO	Analog output	Frequency actual value: 0 - 50 Hz = 0 - 10 V (output voltage)
9	0 V	Reference potential	for +24 V and + 10 V, 0 V = Control signal terminal 7
10	relay	Contact N/O	RUN = Run signal (operating signal); closed when there is an enable signal at DI1 or DI2.
11			

→ When the active enable signal (FWD or REV) is switched off, the motor will coast to a stop with the default settings.

Table 30: Default settings for basic parameters (help card)

Mode parameter	Designation		Unit	Description
P-01	f_{-max}	f-max	Hz	Maximum output frequency; can be set to any value between f-min (P-02) and the motor's rated frequency (P-09); maximum setting: 5 x P-09
P-02	f_{-min}	Min Frequency	Hz	Minimum output frequency, can be set to any value between 0 and f-max (P-01)
P-03	acc	t-acc	s	Acceleration time from stop to rated frequency (P-09).
P-07	U_{Motor}	Motor Nom Voltage	V	Defined rated motor voltage at rated frequency (P-09) = Mains voltage (U_{LN})
P-08	I_{Motor}	Motor Nom Current	A	Rated operational current for the DC1 variable frequency drive. The motor protection function can be adjusted to match the motor being used by setting this parameter to the rated motor current (see example below).
P-09	f_{Motor}	Motor Nom Frequency	f	Rated motor frequency (50 Hz) at the rated motor voltage (P-07)
P-11	V_{-Boost}	V-Boost	%	Voltage is used to increase the applied motor voltage at low output frequency, in order to improve low speed and starting torque.

When the DC1 variable frequency drive is used with its default settings, parameter P-08 will show the drive's rated operational current. The motor protection function can be adjusted to match the motor being used by changing this value to the rated motor current. If the motor current exceeds the value set in P-08, the dots on the display (I x t) will flash to indicate that there is an overload. If this overload is present for a prolonged period of time, the DC1 variable frequency drive will switch off the output in order to protect the motor, and the display will show I.t-trP in order to indicate this.
At this point, the motor will coast to a stop.

The computed value for the thermal motor model may be saved depending on how parameter P-51 has been configured.

Table 31: Thermal memory (T-Memory Enable)

P-51	Storage function	Description
0	OFF	The computed thermal model for the motor will be deleted when the supply voltage is switched off (= default setting).
1	ON	The computed thermal model for the motor will be automatically saved when the supply voltage is switched off and used again when the supply voltage is switched back on.

Example of a motor rating plate

DC1-3402D3… variable frequency drive (rated operational current of 2.3 A) for three-phase mains connection with a voltage of 400 V.

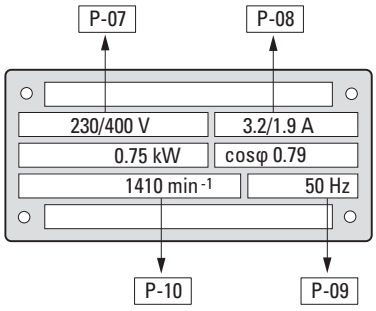

Figure 77:Motor rating plate, P-08 = 1.9 A at 400 V

→ This motor needs to be connected with a star configuration.

Example (adjust the motor protection function)

The following example shows how to adjust the motor protection function:

View	Explanation
	Operating state Stop
StoP OK > 1 s	Press the **OK** button and hold it down for about two seconds.
P-01 ▲/▼	Use the ▲ (Up) or ▼ (Down) arrow key to select parameter P-08. Press the **OK** button to confirm.
P-08 OK	
A 2.3 ▼ 4 x	The rated operational current (2.3 A) for the DC1-342D3 variable frequency drive will be displayed.
A 1.9 OK > 1 s P-08 = 1.9 A	Press the ▼ (Down) arrow key four times in order to set the appropriate rated motor current (1.9 A with 400 V). The motor protection function will be adjusted so as to match the motor being used
StoP	Press the **OK** button and hold it down for about two seconds to confirm.

5.4 Control signal terminals

5.4.1 Correspondence between the inputs/outputs and terminals

Input/output	Terminals
Inputs	
DI1	Terminal 2
DI2	Terminal 3
DI3/AI2	Terminal 4
DI4/AI1	Terminal 6
Outputs	
AO1/DO1	Terminal 8
RO1 (relay, N/O)	Terminals 10/11

You can select predefined terminal configurations in the settings for P-15.

The setting (digital/analog) for terminals 4 and 6 will be configured automatically based on the value set for P-15.

→ See → section 3.6.2.2, "Control signal terminal connection information and functions", page 93

The following abbreviations are used throughout this document:

Table 32: Abbreviations

Abbreviation	Meaning
AI1 REF	Analog input AI1 (terminal 6) Used as a speed setpoint input • P-16: Configuration (voltage input, current input, etc.) • P-35: Scaling • P-39: Offset
AI2 REF	Analog input AI2 (terminal 4) Used as a speed setpoint input. • P-47: Configuration (voltage input, current input, etc.)
DIR	Used to select an operating direction Used together with the START command. • Low = Forward (FWD) • High = Reverse (REV) **Note:** If there is a wire breakage and the REV operating direction is selected, this will cause the drive to reverse! Alternative: Use configuration with FWD/REV.
DOWN	Used to reduce the speed if a digital setpoint value is selected (P-12 = 1 or = 2). Used together with the UP command.
ENA	Variable frequency drive enable signal A start signal (START, FWD, REV) is additionally required for starting. If ENA is removed, the drive will coast.

Abbreviation	Meaning
EXTFLT	External fault This enables an external signal to be incorporated into the variable frequency drive's error messages. A high-level signal must be present on the terminal during operation. A low-level signal causes the drive to switch off with the E-Tr iP error message.
FWD	Used to start the drive in the forward direction (FWD = Forward) If a high-level signal is applied at the corresponding terminal, the drive will accelerate with the selected ramp. Removing the signal will cause the drive to stop. In this case, the specific way in which it stops will depend on the value set for P1-05 (stop mode). Once the variable frequency drive stops, it will be locked. In applications with two operating directions, the reverse direction can be selected with REV. FWD and REV are XOR'd. If both signals are applied simultaneously, the drive will ramp down to zero with the quick stop ramp (P-24).
INV	Used to reverse the operating direction The operating direction will be reversed as per the configured ramps: Low = do not reverse, High = reverse
Pulse FWD (NO) Pulse REV (NO) Pulse STOP (NC)	Pulse control Used to control the drive like a latching reversing contactor circuit. The Pulse STOP signal must always be present when operating the drive. If the signal is not present, it will not be possible to start the drive / the drive will ramp down to zero. To start, all that is required is a pulse via the FWD (forward) or REV (reverse) signal. The FWD and REV signals do not need to be continuously applied during operation.
REV	Used to start the drive in the reverse direction (REV = Reverse) If a high-level signal is applied at the corresponding terminal, the drive will accelerate with the selected ramp. Removing the signal will cause the drive to stop. In this case, the specific way in which it stops will depend on the value set for P-05 (stop mode). Once the variable frequency drive stops, it will be locked. In applications with two operating directions, the forward direction is selected with FWD. FWD and REV are XOR'd. If both signals are applied simultaneously, the drive will ramp down to zero with the quick stop ramp (P-24).
Select AI1 REF/AI2 REF	Used to select between the analog setpoint values on AI1 (terminal 6) and AI2 (terminal 4) • AI1 = Low • AI2 = High
Select AI1 REF/f-Fix	Used to select between the analog speed reference value at analog input 1 (AI1 = terminal 6) and a fixed frequency. The fixed frequency itself can be selected with the Select f-Fix Bit0, Select f-Fix Bit1, Select f-Fix Bit2 commands. • Low = Analog setpoint value • High = fixed frequency
Select AI1 REF/f-Fix1	Used to select between the analog speed reference value at analog input 1 (AI1 = terminal 6) and fixed frequency 1 (f-Fix1), which is set with P-20. • Low = Analog setpoint value • High = f-Fix1
Select AI1 REF/f-Fix2	Used to select between the analog speed reference value at analog input 1 (AI1 = terminal 6) and the fixed frequency (f-Fix2) set with P-21. • Low = Analog setpoint value • High = f-Fix2
Select BUS REF/AI1 REF	Used to select between setpoint values • Low = Setpoint value from bus • High = AI1
Select BUS REF/DIG REF	Used to select xbetween setpoint values • Low = Setpoint value from bus • High = fixed frequency The fixed frequency itself is selected with the Select f-Fix Bit0, Select f-Fix Bit1 commands.
Select BUS REF/f-Fix1	Used to select between the setpoint value from the bus and fixed frequency 1 (f-Fix1), which is set with P-20 • Low = Setpoint value from bus • High = f-Fix1
Select BUS REF/f-Fix4	Used to select between the setpoint value from the bus and fixed frequency 4 (f-Fix4), which is set with P-23 • Low = Setpoint value from bus • High = f-Fix4

Abbreviation	Meaning
Select DIG REF/AI1 REF	Used to select between the digital speed reference value, set with the keypad or with the UP and DOWN commands, and analog setpoint value AI1 REF (terminal 6) • Low = Digital setpoint value • High = AI1
Select DIG REF/f-Fix1	Used to select between the digital speed reference value, set with the keypad or with the UP and DOWN commands, and fixed frequency 1 (f-Fix1) set with P-20. • Low = Digital setpoint value • High = f-Fix1
Select DIG REF/f-Fix4	Used to select between the digital speed reference value (set with the keypad or with the UP and DOWN commands) and fixed frequency 4 (f-Fix4), which is set with P-23 • Low = Digital setpoint value • High = f-Fix4
Select f-Fix Bit0/f-Fix Bit1	Used to select a fixed frequency with digital commands Fixed frequencies f-Fix1 to f-Fix4 are defined with parameters P-20 to P-23. **Fixed** / **Bit 1** / **Bit 0** f-Fix1 (P-20) / 0 / 0 f-Fix2 (P-21) / 0 / 1 f-Fix3 (P-22) / 1 / 0 f-Fix4 (P-23) / 1 / 1 0 = Low 1 = High
Select f-Fix/BUS REF	Used to select between a fixed frequency and the setpoint value from the bus. • Low = Fixed frequency • High = Setpoint value from bus
Select f-Fix/DIG REF	Used to select between a fixed frequency and the digital setpoint value, which is set with the keypad or with the UP and DOWN commands. • Low = Fixed frequency • High = Digital setpoint value
Select f-Fix/f-max	Used to select between a fixed frequency and the maximum speed set with P-01. • Low = Fixed frequency • High = maximum speed The fixed frequency itself is selected with the Select f-Fix Bit0 or Select f-Fix Bit1 commands.
Select f-Fix2/f-Fix4	Used to select between f-Fix2 and f-Fix4 • Low = f-Fix2 • High = f-Fix4
Select f-Fix4/AI1 REF	Used to select between f-Fix4 and the analog setpoint value (terminal 6) • Low = f-Fix4 • High = Analog setpoint value
Select f-Fix4/BUS REF	Used to select between fixed frequency f-Fix4 (P-23) and the setpoint value from the bus • Low = f-Fix4 • High = Setpoint value from bus
Select f-Fix4/DIG REF	Used to select between fixed frequency f-Fix4 (P-23) and the digital setpoint value, which is set with the keypad or with the UP and DOWN commands • Low = f-Fix4 • High = Digital setpoint value
Select f-Fix4/f-Fix2	Used to select between f-Fix4 and f-Fix2 • Low = f-Fix4 • High = f-Fix2
Select f-Fix4/PI REF	Used to select between fixed frequency 4 (f-Fix4) and the setpoint value from the PI controller's output • Low = f-Fix4 • High = Setpoint value from PI controller output

Abbreviation	Meaning
Select Fire Mode/Normal OP	The fire mode function allows the variable frequency drive to keep running in emergency situations until it is no longer able to work. When this mode is selected, drive fault signals will be ignored. • Low = Fire mode • High = Normal mode
Select PI REF/AI1 REF	Used to select between setpoint values • Low = setpoint from the PI controller's output • High = AI1
Select PI REF/f-Fix1	Used to select between setpoint values • Low = setpoint from the PI controller's output • High = f-Fix1, set with P-20
Select t-dec/t-Quick-dec	This command must be present (there must be a high-level signal at the corresponding terminal) in order to be able to run the variable frequency drive. If the signal is removed (low level), the unit will immediately do a quick stop with the ramp defined in P-24.
START	Used to start/stop the drive If a high-level signal is applied at the corresponding terminal, the drive will accelerate with the selected ramp. Removing the signal will cause the drive to stop. In this case, the specific way in which it stops will depend on the value set for P-05 (stop mode). Once the variable frequency drive stops, it will be locked. In applications with two operating directions, the directions are selected using the DIR and INV commands.
START INV	In applications in which the keypad is used to set a setpoint value: When the START command is issued, the drive will start running in the operating direction that was last selected. If START INV is used to start the drive, the drive will run in the opposite direction.
UP	Used to increase the speed if a digital setpoint is selected (P-12 = 1 or = 2). Used together with the DOWN command.

5.4.2 Configuration of the control signal terminals

5.4.2.1 P-12 = 0: Local – Control and setpoint via digital and analog inputs

Table 33: P-12 = 0: Local – Control and setpoint via digital and analog inputs

P-15	DI1 (Terminal 2)	DI2 (Terminal 3)	DI3/AI2 (Terminal 4)	DI4/AI1 (Terminal 6)
0	START	DIR	Select AI1 REF/f-Fix1	AI1 REF
1	FWD	Select AI1 REF/f-Fix	Select f-Fix Bit0	AI1 REF
2	FWD	Select f-Fix Bit0	Select f-Fix Bit1	Select f-Fix/f-max
3	FWD	Select AI1 REF/f-Fix1	EXTFLT	AI1 REF
4	FWD	Select AI1 REF/AI2 REF	AI2 REF	AI1 REF
5	FWD	REV	Select AI1 REF/f-Fix1	AI1 REF
6	START	DIR	EXTFLT	AI1 REF
7	FWD	REV	EXTFLT	AI1 REF
8	START	DIR	Select f-Fix Bit0	Select f-Fix Bit1
9	FWD	REV	Select f-Fix Bit0	Select f-Fix Bit1
10	Pulse FWD (NO)	Pulse STOP (NC)	Select AI1 REF/f-Fix1	AI1 REF
11	Pulse FWD (NO)	Pulse STOP (NC)	Pulse REV (NO)	AI1 REF
12	FWD	Select t-dec/t-QuickDec	Select AI1 REF/f-Fix1	AI1 REF
13	FWD	Select f-Fix Bit0	EXTFLT	Select f-Fix Bit1
14	Pulse FWD (NO)	Pulse STOP (NC)	Pulse REV (NO)	Select DIG REF/f-Fix1
15	FWD	Select f-Fix4/AI1 REF	Select Fire Mode/Normal OP	AI1 REF
16	FWD	Select f-Fix4/f-Fix2	Select Fire Mode/Normal OP	DIR
17	FWD	Select f-Fix Bit0	Select Fire Mode/Normal OP	Select f-Fix Bit1

The setpoint and the control commands are set via terminals.

5.4.2.2 P-12 = 1: Local – Control and digital setpoint using the keypad, one operating direction

Table 34: P-12 = 1: Local – Control and digital setpoint using the keypad, one operating direction

P-15	DI1 (Terminal 2)	DI2 (Terminal 3)	DI3/AI2 (Terminal 4)	DI4/AI1 (Terminal 6)
0	START	UP	DOWN	DIR
1	START	UP	DOWN	DIR
2	FWD	UP	DOWN	Select DIG REF/f-Fix1
3	FWD	UP	EXTFLT	DOWN
4	START	UP	Select DIG REF/AI1 REF	AI1 REF
5	START	UP	DOWN	DIR
6	START	DIR	EXTFLT	Select DIG REF/f-Fix1
7	FWD	REV	EXTFLT	Select DIG REF/f-Fix1
8	START	UP	DOWN	DIR
9	START	UP	DOWN	DIR
10	START	UP	DOWN	DIR
11	START	UP	DOWN	DIR
12	START	UP	DOWN	DIR
13	FWD	No function	EXTFLT	No function
14	START	UP	DOWN	DIR
15	FWD	Select f-Fix/DIG REF	Select Fire Mode/Normal OP	Select f-Fix4/f-Fix2
16	FWD	Select f-Fix4/DIG REF	Select Fire Mode/Normal OP	DIR
17	FWD	Select DIG REF/f-Fix4	Select Fire Mode/Normal OP	DIR

The setpoint value is set using the keypad = digital setpoint value.
The arrow buttons are used to adjust the setpoint value.

5.4.2.3 P-12 = 2: Local – Control and digital setpoint using the keypad, two operating directions

Table 35: P-12 = 2: Local – Control and digital setpoint using the keypad, two operating directions

P-15	DI1 (Terminal 2)	DI2 (Terminal 3)	DI3/AI2 (Terminal 4)	DI4/AI1 (Terminal 6)
0	START	UP	DOWN	DIR
1	START	UP	DOWN	DIR
2	FWD	UP	DOWN	Select DIG REF/f-Fix1
3	FWD	UP	EXTFLT	DOWN
4	START	UP	Select DIG REF/AI1 REF	AI1 REF
5	START	UP	DOWN	DIR
6	START	DIR	EXTFLT	Select DIG REF/f-Fix1
7	FWD	REV	EXTFLT	Select DIG REF/f-Fix1
8	START	UP	DOWN	DIR
9	START	UP	DOWN	DIR
10	START	UP	DOWN	DIR
11	START	UP	DOWN	DIR
12	START	UP	DOWN	DIR
13	FWD	No function	EXTFLT	No function
14	START	UP	DOWN	DIR
15	FWD	Select f-Fix/DIG REF	Select Fire Mode/Normal OP	Select f-Fix4/f-Fix2
16	FWD	Select f-Fix4/DIG REF	Select Fire Mode/Normal OP	DIR
17	FWD	Select DIG REF/f-Fix4	Select Fire Mode/Normal OP	DIR

The setpoint value is set using the keypad = digital setpoint value.
The arrow buttons are used to adjust the setpoint value.

P-12 = 2: If the motor is running, pressing the green button again will reverse the operating direction. The last operating direction will be stored when the unit is switched off.

5.4.2.4 P-12 = 3: Modbus – Internal acceleration and deceleration ramps, control via fieldbus

Table 36: Modbus – Internal acceleration and deceleration ramps, control via fieldbus

P-15	DI1 (Terminal 2)	DI2 (Terminal 3)	DI3/AI2 (Terminal 4)	DI4/AI1 (Terminal 6)
0	START	No function	No function	No function
1	Not permissible	Not permissible	Not permissible	Not permissible
2	START	No function	No function	No function
3	START	Select BUS REF/f-Fix1	EXTFLT	No function
4	START	No function	No function	No function
5	START	Select f-Fix/BUS REF	Select f-Fix1/f-Fix2	No function
6	START	Select BUS REF/AI1 REF	EXTFLT	AI1 REF
7	START	Select BUS REF/DIG REF	EXTFLT	No function
8	START	No function	No function	No function
9	START	No function	No function	No function
10	START	No function	No function	No function
11	START	No function	No function	No function
12	START	No function	No function	No function
13	START	No function	EXTFLT	No function
14	START	No function	No function	No function
15	FWD	Select f-Fix/BUS REF	Select Fire Mode/Normal OP	Select f-Fix4/f-Fix2
16	FWD	Select f-Fix4/BUS REF	Select Fire Mode/Normal OP	No function
17	FWD	Select DIG REF/f-Fix4	Select Fire Mode/Normal OP	No function

5.4.2.5 P-12 = 4: Modbus – Control, setpoint and ramps via fieldbus

Table 37: P-12 = 4: Modbus – Control, setpoint and ramps via fieldbus

P-15	DI1 (Terminal 2)	DI2 (Terminal 3)	DI3/AI2 (Terminal 4)	DI4/AI1 (Terminal 6)
0	START	No function	No function	No function
1	Not permissible	Not permissible	Not permissible	Not permissible
2	START	No function	No function	No function
3	START	Select BUS REF/f-Fix1	EXTFLT	No function
4	START	No function	No function	No function
5	Not permissible	Not permissible	Not permissible	Not permissible
6	START	Select BUS REF/AI1 REF	EXTFLT	AI1 REF
7	START	Select BUS REF/DIG REF	EXTFLT	No function
8	START	No function	No function	No function
9	START	No function	No function	No function
10	START	No function	No function	No function
11	START	No function	No function	No function
12	START	No function	No function	No function
13	START	No function	EXTFLT	No function
14	START	No function	No function	No function
15	FWD	Select f-Fix/BUS REF	Select Fire Mode/Normal OP	Select f-Fix4/f-Fix2
16	FWD	Select f-Fix4/BUS REF	Select Fire Mode/Normal OP	No function
17	FWD	Select DIG REF/f-Fix4	Select Fire Mode/Normal OP	No function

5.4.2.6 P-12 = 5: Local – PID controller

Table 38: P-12 = 5: Local – PID controller

P-15	DI1 (Terminal 2)	DI2 (Terminal 3)	DI3/AI2 (Terminal 4)	DI4/AI1 (Terminal 6)
0	FWD	Select PI REF/f-Fix1	No function	No function
1	FWD	Select PI REF/AI1 REF	No function	AI1 REF
2	FWD	Select PI REF/f-Fix1	No function	No function
3	FWD	Select PI REF/f-Fix1	No function	PI feedback
4	Pulse FWD (NO)	Pulse STOP (NC)	No function	No function
5	Pulse FWD (NO)	Pulse STOP (NC)	PI REF/f-Fix1	No function
6	Pulse FWD (NO)	Pulse STOP (NC)	EXTFLT	No function
7	FWD	Select PI REF/f-Fix1	No function	PI feedback
8	START	FWD/REV	AI2 REF	No function
9	FWD	Select PI REF/f-Fix1	No function	No function
10	FWD	Select PI REF/f-Fix1	No function	No function
11	FWD	Select PI REF/f-Fix1	No function	No function
12	FWD	Select PI REF/f-Fix1	No function	No function
13	START	No function	EXTFLT	No function
14	FWD	Select PI REF/f-Fix1	No function	No function
15	FWD	Select f-Fix4/PI REF	Select Fire Mode/Normal OP	No function
16[1)]	FWD	Select f-Fix4/f-Fix2	Select Fire Mode/Normal OP	No function
17[1)]	FWD	Select f-Fix2/f-Fix4	Select Fire Mode/Normal OP	No function

1) If P-15 = 16 or 17, the fixed frequencies will only be enabled in fire mode.

5.4.2.7 P-12 = 6: Local – PID controller with summation of AI1

Table 39: P-12 = 6: Local – PI controller with summation of AI1

P-15	DI1 (Terminal 2)	DI2 (Terminal 3)	DI3/AI2 (Terminal 4)	DI4/AI1 (Terminal 6)
0	FWD	Select PI REF/f-Fix1	No function	No function
1	FWD	Select PI REF/AI1 REF	No function	AI1 REF
2	FWD	Select PI REF/f-Fix1	No function	No function
3	FWD	Select PI REF/f-Fix1	No function	PI feedback
4	Pulse FWD (NO)	Pulse STOP (NC)	No function	No function
5	Pulse FWD (NO)	Pulse STOP (NC)	PI REF/f-Fix1	No function
6	Pulse FWD (NO)	Pulse STOP (NC)	EXTFLT	No function
7	FWD	Select PI REF/f-Fix1	No function	PI feedback
8	START	FWD/REV	AI2 REF	No function
9	FWD	Select PI REF/f-Fix1	No function	No function
10	FWD	Select PI REF/f-Fix1	No function	No function
11	FWD	Select PI REF/f-Fix1	No function	No function
12	FWD	Select PI REF/f-Fix1	No function	No function
13	START	No function	EXTFLT	No function
14	FWD	Select PI REF/f-Fix1	No function	No function
15	FWD	Select f-Fix4/PI REF	Select Fire Mode/Normal OP	No function
16[1)]	FWD	Select f-Fix4/f-Fix2	Select Fire Mode/Normal OP	No function
17[1)]	FWD	Select f-Fix2/f-Fix4	Select Fire Mode/Normal OP	No function

1) If P-15 = 16 or 17, the fixed frequencies will only be enabled in fire mode.

5.4.2.8 P-12 = 7: CANopen – Internal acceleration and deceleration ramps, control via fieldbus

Table 40: P-12 = 7: CANopen – Internal acceleration and deceleration ramps, control via fieldbus

P-15	DI1 (Terminal 2)	DI2 (Terminal 3)	DI3/AI2 (Terminal 4)	DI4/AI1 (Terminal 6)
0	START	No function	No function	No function
1	START	No function	No function	No function
2	START	No function	No function	No function
3	START	Select BUS REF/f-Fix	EXTFLT	No function
4	START	No function	No function	No function
5	START	Select BUS REF/f-Fix	Select f-Fix1/f-Fix2	No function
6	START	Select BUS REF/AI1 REF	EXTFLT	AI1 REF
7	START	Select BUS REF/DIG REF	EXTFLT	No function
8	START	No function	No function	No function
9	START	No function	No function	No function
10	START	No function	No function	No function
11	START	No function	No function	No function
12	START	No function	No function	No function
13	START	No function	EXTFLT	No function
14	START	No function	No function	No function
15	FWD	Select f-Fix/BUS REF	Select Fire Mode/Normal OP	Select f-Fix4/f-Fix2
16	FWD	Select f-Fix4/BUS REF	Select Fire Mode/Normal OP	No function
17	FWD	Select BUS REF/f-Fix4	Select Fire Mode/Normal OP	No function

5.4.2.9 P-12 = 8: CANOpen – Control, setpoint and ramps via fieldbus

Table 41: P-12 = 8: CANOpen – Control, setpoint and ramps via fieldbus

P-15	DI1 (Terminal 2)	DI2 (Terminal 3)	DI3/AI2 (Terminal 4)	DI4/AI1 (Terminal 6)
0	START	No function	No function	No function
1	START	No function	No function	No function
2	START	No function	No function	No function
3	START	Select BUS REF/f-Fix1	EXTFLT	No function
4	START	No function	No function	No function
5	START	Select BUS REF/f-Fix1	Select f-Fix1/f-Fix2	No function
6	START	Select BUS REF/AI1 REF	EXTFLT	AI1 REF
7	START	Select BUS REF/DIG REF	EXTFLT	No function
8	START	No function	No function	No function
9	START	No function	No function	No function
10	START	No function	No function	No function
11	START	No function	No function	No function
12	START	No function	No function	No function
13	START	No function	EXTFLT	No function
14	START	No function	No function	No function
15	FWD	Select f-Fix/BUS REF	Select Fire Mode/Normal OP	Select f-Fix4/f-Fix2
16	FWD	Select f-Fix4/BUS REF	Select Fire Mode/Normal OP	No function
17	FWD	Select BUS REF/f-Fix4	Select Fire Mode/Normal OP	No function

5.4.2.10 P-12 = 9: PROFIdrive – Control and setpoint via fieldbus

Table 42: P-12 = 9: PROFIdrive – Control and setpoint via fieldbus

P-15	DI1 (Terminal 2)	DI2 (Terminal 3)	DI3/AI2 (Terminal 4)	DI4/AI1 (Terminal 6)
0	START	No function	Select AI1 REF/f-Fix1	AI1 REF
1	START	Select AI1 REF/f-Fix	Select f-Fix1/f-Fix2	AI1 REF
2	START	Select f-Fix Bit0	Select f-Fix Bit1	Select f-Fix/max. speed
3	START	Select AI1 REF/f-Fix1	EXTFLT	AI1 REF
4	START	Select AI1 REF/AI2 REF	AI2 REF	AI1 REF
5	START	No function	Select AI1 REF/f-Fix1	AI1 REF
6	START	No function	EXTFLT	AI1 REF
7	START	No function	EXTFLT	AI1 REF
8	START	No function	Select f-Fix Bit0	Select f-Fix Bit1
9	START	No function	Select f-Fix Bit0	Select f-Fix Bit1
10	START	No function	Select AI1 REF/f-Fix1	AI1 REF
11	START	No function	Select AI1 REF/f-Fix1	AI1 REF
12	START	No function	Select AI1 REF/f-Fix1	AI1 REF
13	START	No function	EXTFLT	No function
14	START	No function	Select AI1 REF/f-Fix1	AI1 REF
15[1)]	START	No function	Select Fire Mode/Normal OP	No function
16[2)]	START	Select AI1/f-Fix2	Select Fire Mode/Normal OP	AI1 REF
17	START	Select f-Fix Bit0	Select Fire Mode/Normal OP	Select f-Fix Bit1

1) If P-15 = 15 and fire mode is active, the drive will run with fixed frequency 4 (f-Fix4), which is set with P-13.
2) If P-15 = 16, the setpoint value selection will be independent from fire mode.

5.4.2.11 P-12 = 10: PROFIdrive: Control via network, local setpoint

Table 43: P-12 = 10: PROFIdrive: Control via network, local setpoint

P-15	DI1 (Terminal 2)	DI2 (Terminal 3)	DI3/AI2 (Terminal 4)	DI4/AI1 (Terminal 6)
0	START	No function	Select AI1 REF/f-Fix1	AI1 REF
1	START	Select AI1 REF/f-Fix	Select f-Fix1/f-Fix2	AI1 REF
2	START	Select f-Fix Bit0	Select f-Fix Bit1	Select f-Fix/max. speed
3	START	Select AI1 REF/f-Fix1	EXTFLT	AI1 REF
4	START	Select AI1 REF/AI2 REF	AI2 REF	AI1 REF
5	START	No function	Select AI1 REF/f-Fix1	AI1 REF
6	START	No function	EXTFLT	AI1 REF
7	START	No function	EXTFLT	AI1 REF
8	START	No function	Select f-Fix Bit0	Select f-Fix Bit1
9	START	No function	Select f-Fix Bit0	Select f-Fix Bit1
10	START	No function	Select AI1 REF/f-Fix1	AI1 REF
11	START	No function	Select AI1 REF/f-Fix1	AI1 REF
12	START	No function	Select AI1 REF/f-Fix1	AI1 REF
13	START	No function	EXTFLT	No function
14	START	No function	Select AI1 REF/f-Fix1	AI1 REF
15[1)]	START	No function	Select Fire Mode/Normal OP	No function
16[2)]	START	Select AI1/f-Fix2	Select Fire Mode/Normal OP	AI1 REF
17	START	Select f-Fix Bit0	Select Fire Mode/Normal OP	Select f-Fix Bit1

1) If P-15 = 15 and fire mode is active, the drive will run with fixed frequency 4 (f-Fix4), which is set with P-13.
2) If P-15 = 16, the setpoint value selection will be independent from fire mode.

5.4.2.12 P-12 = 11: PROFIdrive – Control via terminals, setpoint via fieldbus

Table 44: P-12 = 11: PROFIdrive – Control via terminals, setpoint via fieldbus

P-15	DI1 (Terminal 2)	DI2 (Terminal 3)	DI3/AI2 (Terminal 4)	DI4/AI1 (Terminal 6)
0	START	No function	Select AI1 REF/f-Fix1	AI1 REF
1	START	Select AI1 REF/f-Fix	Select f-Fix1/f-Fix2	AI1 REF
2	START	Select f-Fix Bit0	Select f-Fix Bit1	Select f-Fix/max. speed
3	START	Select AI1 REF/f-Fix1	EXTFLT	AI1 REF
4	START	Select AI1 REF/AI2 REF	AI2 REF	AI1 REF
5	START	No function	Select AI1 REF/f-Fix1	AI1 REF
6	START	No function	EXTFLT	AI1 REF
7	START	No function	EXTFLT	AI1 REF
8	START	No function	Select f-Fix Bit0	Select f-Fix Bit1
9	START	No function	Select f-Fix Bit0	Select f-Fix Bit1
10	START	No function	Select AI1 REF/f-Fix1	AI1 REF
11	START	No function	Select AI1 REF/f-Fix1	AI1 REF
12	START	No function	Select AI1 REF/f-Fix1	AI1 REF
13	START	No function	EXTFLT	No function
14	START	No function	Select AI1 REF/f-Fix1	AI1 REF
15[1)]	START	No function	Select Fire Mode/Normal OP	No function
16[2)]	START	Select AI1/f-Fix2	Select Fire Mode/Normal OP	AI1 REF
17	START	Select f-Fix Bit0	Select Fire Mode/Normal OP	Select f-Fix Bit1

1) If P-15 = 15 and fire mode is active, the drive will run with fixed frequency 4 (f-Fix4), which is set with P-13.
2) If P-15 = 16, the setpoint value selection will be independent from fire mode.

5.4.2.13 P-12 = 12: PROFIdrive: Control and setpoint via fieldbus, automatic switchover to local control (P-12 = 0) in the event of communication loss

Table 45: P-12 = 12: PROFIdrive: Control and setpoint via fieldbus, automatic switchover to local control (P-12 = 0) in the event of communication loss

P-15	DI1 (Terminal 2)	DI2 (Terminal 3)	DI3/AI2 (Terminal 4)	DI4/AI1 (Terminal 6)
0	START	No function	Select AI1 REF/f-Fix1	AI1 REF
1	START	Select AI1 REF/f-Fix	Select f-Fix1/f-Fix2	AI1 REF
2	START	Select f-Fix Bit0	Select f-Fix Bit1	Select f-Fix/max. speed
3	START	Select AI1 REF/f-Fix1	EXTFLT	AI1 REF
4	START	Select AI1 REF/AI2 REF	AI2 REF	AI1 REF
5	START	No function	Select AI1 REF/f-Fix1	AI1 REF
6	START	No function	EXTFLT	AI1 REF
7	START	No function	EXTFLT	AI1 REF
8	START	No function	Select f-Fix Bit0	Select f-Fix Bit1
9	START	No function	Select f-Fix Bit0	Select f-Fix Bit1
10	START	No function	Select AI1 REF/f-Fix1	AI1 REF
11	START	No function	Select AI1 REF/f-Fix1	AI1 REF
12	START	No function	Select AI1 REF/f-Fix1	AI1 REF
13	START	No function	EXTFLT	No function
14	START	No function	Select AI1 REF/f-Fix1	AI1 REF
15[1)]	START	No function	Select Fire Mode/Normal OP	No function
16[2)]	START	Select AI1/f-Fix2	Select Fire Mode/Normal OP	AI1 REF
17	START	Select f-Fix Bit0	Select Fire Mode/Normal OP	Select f-Fix Bit1

1) If P-15 = 15 and fire mode is active, the drive will run with fixed frequency 4 (f-Fix4), which is set with P-13.
2) If P-15 = 16, the setpoint value selection will be independent from fire mode.

5.4.2.14 P-12 = 13: Dual mode – Control and setpoint via PROFIdrive telegram – enable via DI1

Table 46: P-12 = 13: Dual mode – Control and setpoint via PROFIdrive telegram – enable via DI1

P-15	DI1 (Terminal 2)	DI2 (Terminal 3)	DI3/AI2 (Terminal 4)	DI4/AI1 (Terminal 6)
0	START	No function	Select AI1 REF/f-Fix1	AI1 REF
1	START	Select AI1 REF/f-Fix	Select f-Fix1/f-Fix2	AI1 REF
2	START	Select f-Fix Bit0	Select f-Fix Bit1	Select f-Fix/max. speed
3	START	Select AI1 REF/f-Fix1	EXTFLT	AI1 REF
4	START	Select AI1 REF/AI2 REF	AI2 REF	AI1 REF
5	START	No function	Select AI1 REF/f-Fix1	AI1 REF
6	START	No function	EXTFLT	AI1 REF
7	START	No function	EXTFLT	AI1 REF
8	START	No function	Select f-Fix Bit0	Select f-Fix Bit1
9	START	No function	Select f-Fix Bit0	Select f-Fix Bit1
10	START	No function	Select AI1 REF/f-Fix1	AI1 REF
11	START	No function	Select AI1 REF/f-Fix1	AI1 REF
12	START	No function	Select AI1 REF/f-Fix1	AI1 REF
13	START	No function	EXTFLT	No function
14	START	No function	Select AI1 REF/f-Fix1	AI1 REF
15[1)]	START	No function	Select Fire Mode/Normal OP	No function
16[2)]	START	Select AI1/f-Fix2	Select Fire Mode/Normal OP	AI1 REF
17	START	Select f-Fix Bit0	Select Fire Mode/Normal OP	Select f-Fix Bit1

1) If P-15 = 15 and fire mode is active, the drive will run with fixed frequency 4 (f-Fix4), which is set with P-13.
2) If P-15 = 16, the setpoint value selection will be independent from fire mode.

5.5 Messages

DC1 series variable frequency drives come with several internal monitoring functions. When a deviation from the correct operating state is detected, an error message will be displayed; in the drive's default settings, the relay contact will open (control terminals 10 and 11).

5.5.1 Fault History

The most recent four error messages will be stored in the order in which they occurred (with the most recent one in the first place). Error messages can be read from the display-parameter P00-13.

5.5.1.1 Acknowledge error message (Reset)

To acknowledge and reset the current error message, you can either switch off the supply voltage or press the STOP pushbutton. Error messages (a maximum of four) are stored in parameter P00-13. Error messages can also be reset with a new start signal (new rising edge) at control signal terminal 2 (DI1) or 3 (DI2).

If you use Modbus or CAN, set the reset bit in the control word to the value "1" to reset an error.

Please note:

In the event of 0-1 , h0-1 or I.t-trP faults, in order to prevent damage that may occur through repeatedly enabling the drive into a fault condition, these trips cannot be reset immediately. A delay time according to the following table must be allowed before reset is possible.

Table 47: Delay time

Trip	Hint
First trip	2 seconds delay before reset is possible
Second trip	4 seconds delay before reset is possible
Third trip	8 seconds delay before reset is possible
Fourth trip	16 seconds delay before reset is possible
Fifth trip	32 seconds delay before reset is possible
Subsequent trips	63 seconds delay before reset is possible

5.5.1.2 Fault log

The fault log (P00-13) stores the most recent four error messages in the order in which they occurred. The most recent error message will always be shown as the first value when P00-13 is accessed.
To see the remaining error messages one after the other, press the ▲ (Up) button. Their order will be indicated by the number of flashing dots on the 7-segment digital display assembly.

→ The values in the fault log (P00-13) will not be deleted if the variable frequency drive is reset to its default settings!

→ In order to view parameter P00-13, you will first need to enable access to the extended parameter set: P-14 = P-37 (default setting: 101)

5.5.2 List of messages

Table 48: Error messages list

Message	Error no. [dec]	Possible cause and remedy
StoP	–	Ready to start. There is no drive enable signal present. There are no error messages present.
01 -b	01	Excessively high braking current • Check the brake resistor and its wiring for short-circuits and ground faults. • Make sure that the braking resistance value is not lower than the minimum permissible braking resistance.
OL -br	02	Thermal overload on brake resistor. The drive has been switched off in order to prevent the brake resistor from being thermally destroyed. This message will only be output if P-34 = 1 ("braking chopper") • Make the P-04 and P-24 ramp times longer in order to have less frequent braking. • e).Reduce the load's inertia (if possibl If the protection achieved with P-34 = 1 is not adequate for the brake resistor being used: • Provide external protection for the brake resistor and set P-34 to a value of 2.
O-I	03	Overcurrent at variable frequency drive output Occurs right after switching on the unit: • Check the cable connection between the variable frequency drive and the motor • Check the motor for shorted windings and ground faults Occurs when starting the motor: • Check whether the motor can rotate freely and make sure that it is not being blocked mechanically. • Motor with mechanical brake: Check whether this has been triggered. • Check the connection configuration (star/delta) • Check to make sure that the correct rated motor current has been entered in P-08 • Increase the acceleration ramp time (t-acc, P-03) if necessary. • Reduce the voltage boost with P-11. Occurs during operation at a constant speed: • Check whether the motor is overloaded. Occurs during acceleration/deceleration: • The ramp times are too short and require too much power. If P-03/P-04 cannot be increased, a larger device may be required.

Message	Error no. [dec]	Possible cause and remedy
I.t-trP	04	Motor overload. The thermal protection mechanism has tripped as a result of the device being run above the rated motor current set with P-08 longer than a specific time. • Check to make sure that the rated motor current has been entered in P-08. • Check the motor's connection configuration (e.g., start/delta) • If the decimal points on the display flash during operation, this means that the unit is being run in its overload range (> P-08). In this case, use P-03 to make the acceleration ramp longer or reduce the load. • Check whether the motor is being blocked mechanically or whether there are any additional loads.
PS-trP	05	Overcurrent (Hardware) • Check the wiring to the motor and the motor itself for short-circuits and ground faults. • Disconnect the motor cable from the variable frequency drive and switch the variable frequency drive back on. • If the fault message still appears, the device needs to be replaced. Before commissioning the new device, check the system for short-circuits or ground faults that could have caused the device to fail.
OUolt	06	Overvoltage in DC link • Check to make sure that the supply voltage falls within the range for which the variable frequency drive is sized. If the error occurs during deceleration or stopping: • Make the deceleration ramp (P-04/P-24) longer or use the brake resistor and activate the braking chopper with P-34 (only on devices with frame size FS2, FS3, or FS4).
UUolt	07	Undervoltage in DC link **Note:** Generally, this message will appear when the supply voltage is switched off on the device and the DC link voltage dies away. In this case, there is no fault. If the message appears during operation: • Check whether the power supply voltage is too low. • Check all components/devices in the variable frequency drive's feeder circuit (circuit-breaker, contactor, choke, etc.) to make sure they are connected properly and have an adequate contact resistance.
O-t	08	Overtemperature at heat sink. The drive is too hot. • Check to make sure that the variable frequency drive is being operated within the ambient temperature range specified for it. (IP20 devices: max. 50 °C; IP66 devices: max. 40 °C). • Make sure that cooling air can circulate freely (clearances to neighboring devices above and below the variable frequency drive). • Improve the ventilation in the control cabinet if necessary. The device's vents must not be obstructed, e.g., by dirt or as a result of devices being installed too close to each other.
U-t	09	Under-temperature. The message will appear if the ambient temperature falls below -10 °C. In order to be able to start the drive, the temperature must be higher than this.
P-dEF	10	The parameters' default settings have been loaded.
E-tr iP	11	External fault (at digital input 3, terminal 4). There must be a high-level signal at this input in order to be able to run the variable frequency drive. If a thermistor is connected to terminal 4: • Check whether the motor is too hot.
SC-Ob5	12	Serial communication lost • Check whether the connection to other variable frequency drives and external devices is working correctly: Each module on the bus must have its own address. There must not be two or more modules with the exact same address!
FIt-dc	13	Excessively high DC-Link voltage ripple
P-LOSS	14	Incoming power phase failure (only for devices with a three-phase power supply)

Message	Error no. [dec]	Possible cause and remedy
hO-I	15	Overcurrent at output. See fault 03 (O-I).
tH-FLt	16	Malfunctioning heat sink thermistor. • Please contact your nearest Eaton sales branch.
dAtA-F	17	Error in internal memory. The parameters have not been saved and the default settings have been loaded. Change the parameter values (again) and save them once more. If the message appears again, please contact your nearest Eaton sales branch.
4-20 F	18	The analog input's input current does not fall within the specified range. • Check the setting in P-16 for AI1 and P-47 for AI2 In the case of 4-20mA: • Check the setpoint connection for wire breakage
dAtA-E	19	Internal memory error (DSP) • Press the Stop button. • If the fault persists, please contact your nearest Eaton sales branch.
F-Ptc	21	Motor PTC thermistor input select fault – Overtheating of the connected motor thermistor • Check the cable connections and the motor.
FAn-F	22	Cooling fan fault (IP66 only) • Check or replace the cooling fan.
O-hEAt	23	Internal temperature too high/ambient temperature of the variable frequency drive too high • Check that adequate cooling is provided.
AtF-01	40	Motor identification failed
AtF-02	41	Motor identification failed: The measured stator resistance is too large.
AtF-03	42	Motor identification failed: The measured motor inductance is too low.
AtF-04	43	Motor identification failed: The measured motor inductance is too high.
AtF-05	44	Motor identification failed: The measured motor parameters do not match.
OuL-Ph	49	A phase in the motor cable is not connected or has a discontinuity.
SC-F01	50	Fault due to Modbus communication loss • Check the incoming Modbus RTU connection cable. • Check that at least one register within the time-out limit set in P-36 Index 3 is queried cyclically.
SC-F02	51	Fault trip occurred due to loss of CANopen communication • Check the incoming CAN connection cable. • Check whether cyclic communications occur within the time-out limit set in P-36 Index 3.
Err254	–	Internal error Try to install the latest firmware version on the device. If this does not work, please contact your nearest Eaton sales branch.
SC-FLt	–	Internal error • Please contact your nearest Eaton sales branch.
FAULtY	–	Internal error • Please contact your nearest Eaton sales branch.

Message	Error no. [dec]	Possible cause and remedy
SC-trIP	–	Serial communication lost • Check whether the connection to other variable frequency drives and external devices is working correctly: Each module on the bus must have its own address. There must not be two or more modules with the exact same address!
Prog-1	–	Firmware Update in progress
SPI n-F	–	Speed detection before switching (on the running motor) unsuccessful

5.5.3 Fault diagnostics

The number of critical faults and specific malfunctions will be logged for diagnostic purposes. The corresponding values can be read by accessing the display parameters (→ section 5.1, "Parameter groups", page 127). Please note that these values cannot be edited or deleted.

Table 49: Critical faults and specific malfunctions

Mode parameter	Designation	Description
P00-33	O-I	Number of overcurrent signals at the variable frequency drive's output **Critical fault!**
P00-34	O Volt5	Number of overvoltage signals in the internal DC link **Critical fault!**
P00-35	U-volt5	Number of undervoltage signals in the internal DC link **Critical fault!**
P00-36	O-tEmP	Hours with overtemperature at heat sink **Critical fault!**
P00-37	b O-I	Number of overcurrent signals from braking chopper **Critical fault!**
P00-38	O-hEAt	Number of overtemperature signals from control section **Critical fault!**
P00-39	–	Modbus – Number of communication errors
P00-40	–	CANopen – Number of communication errors
P00-41	–	I/O processor – Number of communication errors
P00-42	–	Microprocessor in power section – number of communication errors

5.5.4 Messages after a data transfer with a DX-COM-STICK…

Table 50: Possible messages displayed after a data transfer

Message displayed	Description
PASS-r	Parameter transfer to DX-COM-STICK3 interface card was successful.
DS-Loc	DX-COM-STICK3 is locked. In order to transfer data, check the switch position on the side.
FAiL-r	Error while attempting to read the parameters from the variable frequency drive.
PASS-t	Parameter transfer to variable frequency drive successful.
FAiL-P	The parameter set stored in the DX-COM-STICK3 is for a different output variable (different motor current or motor output, etc.) than that of the connected variable frequency drive.
FAil-t	Error when attempting to copy parameter set to variable frequency drive
no-dAt	No data saved on DX-COM-STICK3
dr-Loc	Parameter set in variable frequency drive locked. Unlock variable frequency drive first.
dr-rUn	The variable frequency drive has an enable signal and cannot take new parameters. Stop the variable frequency drive.
tYPE-E	The parameter set stored in the DX-COM-STICK… does not match the variable frequency drive. Only transfers from the variable frequency drive to the DX-COM-STICK… are possible.
tYPE-F	The DX-COM-STICK… is not compatible with the variable frequency drive.

5.5.5 Operating status indicators

The six flashing dots on the seven-segment display are used to indicate various operating statuses.

8.8.8.8.8.8.
↓ ↓ ↓ ↓ ↓ ↓
1 2 3 4 5 6

Number(s)	Behavior	Meaning
1, 2, 3, 4, 5, 6	Flash synchronously	Overload The current currently exceeds the value set with P-08.
1, 6	Flash in an alternating pattern	Power outage or power supply switched off
1	flashes	Fire Mode enabled

5.5.6 Operating Displays

During Run DC1 variable frequency drive can show different operating values like frequency, current or power. To switch between the values, press "OK".

Table 51: Operating displays

Message	Description
H 50.0	Drive is enabled / running, display shows the output frequency (Hz)
A 2.3	Press the “OK“ key < 1 s. The display will show the motor current (A)
P 1.50	Press the “OK“ key < 1 s. The display will show the motor power (kW)
1500	If P - 10 > 0, pressing the “OK“ key for < 1 s will display the motor speed (rpm)

5.6 Parameters

The abbreviations used in the following tables are defined below:

Abbreviation	Meaning
Min. value	Minimum value
Max. value	Maximum value
DS	Default setting (the parameter's value when using the device's factory settings)

→ None of the parameters in parameter group 0 can be modified by the user; they are read-only parameters.

5.6.1 "Monitor" parameter group

Table 52: "Monitor" parameter group

Parameter	Designation	Min. value	Max. value	Description
P00-01	Analog Input1	0 %	100 %	Analog Input 1 Level of the signal applied to analog input 1 after scaling and offsets have been applied.
P00-02	Analog Input2	0 %	100 %	Analog Input 2 Level of the signal applied to analog input 2 after scaling and offsets have been applied.
P00-03	Frequency Reference	-P-01	P-01	Frequency Reference in Hz. Will be calculated into rpm when motor data are available. Value of the drive internal digital reference
P00-04	DI Status	0	1	Status of the Digital Inputs Status of the digital inputs starting on the left hand side with digital input 1 etc.
P00-05	PID1 Output	0 %	100 %	PI(D) controller 1 Output
P00-06	DC-Link Voltage Ripple	0 V	1000 V	DC-Link Voltage Ripple
P00-07	Motor Voltage	0 V	600 V AC	Instantaneous output voltage
P00-08	DC-Link Voltage	0 V	1000 V DC	Instantaneous DC Link Voltage
P00-09	Heatsink Temperature	-20 °C	100 °C	Instantaneous Heatsink Temperature
P00-10	t-Run	0 h	99999 h	Total operating time of the drive since the date of manufacture
P00-11	t-Run since Trip	0 h	65000 h	Total operating time of the drive since the last trip occurred. Run-time clock stopped by drive disable (or trip), reset on next enable only if a trip occurred. Reset also on next enable after a drive power down. Displayed in hours, minutes and seconds. Pressing the UP key on the drive keypad will change the display from "hours" to "minutes and seconds".

Parameter	Designation	Min. value	Max. value	Description
P00-12	t-Run since Trip	0 h	65000 h	Total operating time of the drive since the last trip occurred Run-time clock stopped by drive disable (or trip), reset on next enable only if a trip occurred (under-volts not considered a trip) – not reset by power down / power up cycling unless a trip occurred prior to power down. Displayed in hours, minutes and seconds. Pressing the UP key ▲ on the drive keypad will change the display from "hours" to "minutes and seconds".
P00-13	Last Fault PDP	0 h	65000 h	Last faul, second to last fault, third to last fault, fourth last fault Fault time in the operating hour xxx
P00-14	t-HoursRun Enable	0 h	65000 h	Total operating time of the drive since the last drive ENABLE signal was applied. Displayed in hours, minutes and seconds. Pressing the UP key ▲ on the drive keypad will change the display from "hours" to "minutes and seconds".
P00-15	DC-Link Log	0 V	1000 V DC	DC link voltage log Recording of the most recent 8 samples of the DC bus voltage prior to a drive trip condition occurring. The sample interval is 256 ms.
P00-16	Heatsink Log	-20 °C	120 °C	Heatsink temperature log Recording of the most recent 8 samples of the heat-sink temperature prior to a drive trip condition occur-ring. The sample interval is 30 s.
P00-17	MotorCurrent Log	0 A	$2 \cdot I_e$	Motor current log Recording of the most recent 8 samples of the Motor current prior to a drive trip condition occurring. The sample interval is 256 ms.
P00-18	DC-Link V-Ripple Log	0 V	1000 V	DC bus Voltage Ripple Log Recording of the most recent 8 samples of the Voltage Ripple prior to a drive trip condition occur-ring. The sample interval is 22 ms.
P00-19	AmbientTemp Log	-20 °C	120 °C	Internal Ambient Temperature Log Recording of the most recent 8 samples of the Internal Ambient Temperature prior to a drive trip condition occurring. The sample interval is 30 s.
P00-20	T-Controlboard	-80 °C	120 °C	Internal ambient temperature of the device, measured on the control board
P00-21	Input Data Value	–	–	Input Data Value
P00-22	Ouput Data Value	–	–	Output Data Value
P00-23	t-Run IGBT in OT	0 h	65000 h	Time elapsed, in which the drive has operated with a high heatsink temperature (> 85 °C).
P00-24	t-Run PCB in OT	0 h	65000 h	Time elapsed, in which the drive has operated with a high temperature at the PCBs (ambient tempera-ture) (> 80 °C).
P00-25	Motor Speed	-P-01	P-01	Motorspeed (calculated or measured)

Parameter	Designation	Min. value	Max. value	Description
P00-26	MWh Meter	–	–	Energy Consumption kWh/MWh Meter (not resettable) Pressing UP key ▲ on the drive keypad will change the display from “kWh” to “MWh”.
P00-27	Fan Runtime	0 h	65000 h	Run time of the integrated fan (not resettable)
P00-28	Application Software Version	–	–	I/O Controller / Application SW Version
P00-29	NoOfInputPhases	–	–	Number of input phases
	FrameSize	–	–	Frame Size
	kW/HP	–	–	Motor Power
	Power@Ue	–	–	Device Power at Device Voltage Rating
	Device Voltage			Device Voltage Rating
	DeviceType			Device Type
P00-30	Serial Number	–	–	Serial Number of the device
P00-31	Magnetizing current I_d	0 A	100.0 A	Calculated Magnetizing Current
	Torque current I_q	0 A	100.0 A	Calculated Torque producing Current
P00-32	Switching Frequency	4 kHz	32 kHz	Power stage switching frequency. Higher frequency reduces the audible 'ringing' noise from the motor, and improves the output current waveform, at the expense of increased heat losses within the drive.
P00-33	FaultCounter Overcurrent	0	65535	Counts, how often "Overcurrent" occured
P00-34	FaultCounter DC-Overvoltage	0	65535	Counts, how often "DC-Overvoltage" occured
P00-35	FaultCounter DC-Undervoltage	0	65535	Counts, how often "DC-Undervoltage" occured
P00-36	FaultCounter Overtemperature Heatsink	0	65535	Counts, how often "Overtemperature Heatsink" occured
P00-37	FaultCounter Overcurrent Brake Chopper	0	65535	Counts, how often "Overcurrent Brake Chopper" occured
P00-38	FaultCounter Overtemperature Ambient	0	65535	Counts, how often "Overtemperature Ambient" occured
P00-39	FaultCounter Communication Loss	0	65535	Counts, how often "Communication Loss" occured
P00-40	FaultCounter CANopen COM Loss	0	65535	Counts, how often "CANopen COM Loss" occured
P00-41	FaultCounter Internal Fault (IO)	0	65535	Counts, how often "Internal Fault (IO)" occured
P00-42	FaultCounter Internal Fault (DSP)	0	65535	Counts, how often "Internal Fault (DSP)" occured
P00-43	t-PowerOn			Total time for which the drive was powered up since the day of manufacture.
P00-47	t-FireMode Active			Run time in Fire Mode
	FaultCounter Fire detected			Counts, how often "Fire detected" occured
P00-48	Scope Channel 1 & 2			The values of Scope Channel 1 and 2.
P00-49	Scope Channel 3 & 4			The values of Scope Channel 3 and 4.
P00-50	System Software Version	–	–	System Software Version

5.6.2 “Basic” parameter group

Table 53: “Basic” parameter group

Para-meter	Designation	Min. value	Max. value	Description	DS
P-01	f-max	0.0 Hz	5 x P-09	Sets the upper limit for the speed of the motor. This can be set to any value between “f-min” and 5x the “motor nom frequency”. When “Motor Nom Frequency” (P-09) is changed, P-01 is set to the value of P-09. “Motor Nom Speed” (P-10) = 0, the maximum speed limit will be displayed in Hz. “Motor Nom Speed” (P-10) > 0, the maximum speed limit will be displayed in rpm.	50.0 Hz
P-02	f-min	0.0 Hz	P-01	Sets the lower limit for the speed of the motor This can be set to any value between 0 and “f-max” (P-01). When “Motor Nom Frequency” (P-09) is changed, P-01 is set to zero. “Motor Nom Speed” (P-10) = 0, the minimum speed limit will be displayed in Hz. “Motor Nom Speed” (P-10) > 0, the minimum speed limit will be displayed in rpm.	0.0 Hz
P-03	t-acc	0.00 s	600 s	Sets the acceleration ramp time in seconds. The time interval set in “t-acc” represents the time taken to accelerate from zero to “Motor Nom Frequency” (P-09).	5.0 s
P-04	t-dec	0.00 s	600 s	Sets the deceleration ramp time in seconds. The time interval set in “t-dec” represents the time taken to decelerate from “Motor Nom Frequency” (P-09) to zero.	5.0 s
P-05	Stop Mode	0	3	Determines the action taken by the drive in the event of the drive enable signal being removed. 0: Ramping. When the enable signal is removed, the drive will ramp to stop, with the rate controlled by “t-dec” (P-04). 1: Coasting. When the enable signal is removed, the drive output is immediately disabled, and the motor will coast (freewheel) to stop. 2: Ramping. When the enable signal is removed, the drive will ramp to stop, with the rate controlled by “t-dec” (P-04). If the mains supply is lost the drive will ramp to stop using the deceleration ramp set by P-24. Condition: P-24 is set to a time which is shorter than the one for discharging the DC link. Otherwise the drive will trip due to “under voltage”. 3: AC flux braking. When stopping the drive, AC flux braking is used to reduce the stopping time.	1
P-06	EnergyOptimizer	0	1	When energy optimization is activated, the motor voltage is dynamically varied, dependent on load. This results in reduced voltage being applied to the motor on light load, significantly reduce energy consumption. This mode of operation is less suitable for dynamic applications where the load conditions can suddenly increase significantly.	0

Parameter	Designation	Min. value	Max. value	Description	DS
P-07	Motor Nom Voltage	0 / 20 V	U_e	Defines the Motor rated voltage. When the output frequency is greater than the "Motor Nom Frequency" (P-09), the output voltage is controlled at the level set with "Motor Nom Voltage" (P-07).	U_e
P-08	Motor Nom Current	0.25 I_e - I_e	I_e	Motor rated current. By setting the "Motor Nom Current" in the drive, the motor overload protection is configured to match the motor rating. When the measured motor current exceeds "Motor Nom Current", the decimal points on the drive display will flash to indicate an overload condition. If this condition persists, the drive will eventually trip, displaying *I.t - trP*, preventing thermal overload of the motor.	I_e
P-09	Motor Nom Frequency	25 Hz	500 Hz	The rated frequency of the motor. This is the frequency at which "Motor Nom Voltage" is applied to the motor. Below this frequency, the applied motor voltage will be reduced. Above this frequency the voltage remains limited to "Motor Nom Voltage". **Hint:** If the value for P-09 is changed, the following parameters will be reset to their default settings: P-01 f-max P-02 f-min P-10 Motor Nom Speed P-20 f-Fix1 P-21 f-Fix2 P-22 f-Fix3 P-23 f-Fix4	50 Hz
P-10	Motor Nom Speed	0 / 200 rpm	30000 rpm	Motor rated speed P-10 = 0: the speed of the motor will be displayed in Hz. P-10 > 0: the speed related parameters (f-max, f-min etc.) will be displayed in rpm. The slip compensation is also activated, where the shaft speed of the motor is maintained under varying load conditions by compensating for the load-dependent slip of the motor. If "Motor Nom Speed" = motor synchronous speed (e.g. 3000 rpm for a 2-pole 50 Hz motor), the speed can be displayed in rpm without activating the slip compensation.	0 rpm
P-11	V-Boost	0.0 %	f (FS) FS1: 25,0 % U_e FS2: 20,0 % U_e FS3: 15,0 % U_e FS4: 10,0 % U_e	Voltage is used to increase the applied motor voltage at low output frequency, in order to improve low speed and starting torque. Excessive voltage boost levels may result in increased motor current and temperature, and forced ventilation may be required.	f (FS) FS1: 3,0 % U_e FS2: 2,5 % U_e FS3: 2,0 % U_e FS4: 1,5 % U_e

Para-meter	Designation	Min. value	Max. value	Description	DS
P-12	Local ProcessData Source	0	13	Local Configuration of Command and Reference Sources 0: Local: Control and Reference via digital and analog inputs 1: Local: Control and digital reference via keypad, 1 direction 2: Local: Control and digital reference via keypad, 2 directions Pressing the keypad START button toggles between forward and reverse. 3: Modbus: Internal acceleration and deceleration ramps, Control via fieldbus communication. 4: Modbus: Control, set point and ramps via fieldbus communication. 5: Local: PI-Controller 6: Local: PI-Controller with accumulation of AI1 7: CAN: Internal acceleration and deceleration ramps, Control via fieldbus communication. 8: CAN: Control, set point and ramps via fieldbus communication. 9: PROFIdrive: Control and set point via network 10: PROFIdrive: Control via network, local set point 11: PROFIdrive: Control via terminals, set point via network 12: PROFIdrive: Control and set point via network, in case of communication loss automatical change to local control (P-12 = 0) 13: Dual Mode: Control and set point via Network - Enabling via DI1	0
P-13	Application Mode Macro	0	2	Influences multiple parameter values inside the drive and combines them to an application specific configuration. 0: Industrial mode (constant torque, no spin start) 1: Pump mode (variable torque for induction motors, no spin start) 2: Fan mode (variable torque for induction motors, spin start) (drive will only spin start on trip.)	0
P-14	Access Key	0	65535	Entry of the password to get access to the extended parameter set. The value to be put in is determined by P-37 (default: 101). Access to Level 2 (extended → P-01 to P-59 and P00-01 to P00-30): P-37 Access to Level 3 (advanced → P-01 to P-68 and P00-01 to P00-50): P-37 + 100	0

5.6.3 “Extended” parameter group

Table 54: “Extended” parameter group

Para-meter	Designation	Min. value	Max. value	Description	DS
P-15	DI Config Select	0	17	Configuration of digital inputs with a fix set of combinations The setting of P-15 determines the input configuration depending on P-12. Possible configurations → section 5.4.2, "Configuration of the control signal terminals", page 143	5
P-16	AI1 Signal Range	0	7	Configures the Analog input 1 for the selected signal source type. 0: 0 - 10 V 1: bipolar 0 - 10 V 2: 0 - 20 mA 3: t 4 - 20 mA (Trips in case of wire break) 4: r 4 - 20 mA (Ramps to f-fix1 (P-20) in case of wire break) 5: t 20 - 4 mA (Trips in case of wire break) 6: r 20 - 4 mA (Ramps to f-fix1 (P-20) in case of wire break) 7: 10 - 0 V 8: Integrated Potentiometer (just on DC1-...0E1)	0
P-17	Switching Frequency	0	f (I_e)	Power stage switching frequency. Higher frequency reduces the audible "ringing" noise from the motor, and improves the output current waveform, at the expense of increased heat losses within the drive. 0: 4 kHz 1: 8 kHz 2: 12 kHz 3: 16 kHz 4: 24 kHz 5: 32 kHz	1
P-18	RO1 Function	0	11	Selection of the function of output relay RO1 0: RUN, enable (FWD/REV) 1: READY, DC1 ready for operation (The relay contact is closed when the drive is powered on and no trip condition is present) 2: Speed = frequency reference value 3: Fault (DC1 not ready) 4: Speed ≧ RO1 Upper Limit (P-19) 5: Motor current ≧ RO1 Upper Limit (P-19) 6: Speed < RO1 Upper Limit (P-19) 7: Motor current < RO1 Upper Limit (P-19) 8: Drive not enabled 9: Motor not at target speed 10: Analog Input AI2 > RO1 Upper Limit 11: READY. DC1…E1 ready for operation. The relay contact is closed when the drive is powered on and no trip condition is present. In addition the hardware enable signal (ENA) must be present at the terminal. 12: Relay output controlled via network (when P-12 = 9 to 13).	0
P-19	RO1 upper Limit	0.00 %	200.00 %	Switching ON threshold of relay RO1 with P-18 = 4, …, 7, 10	100.00 %
P-20	f-Fix1	P-02	P-01	Preset Fixed Frequency 1 Value can be adjusted between f-min and f-max. Selection via a digital control signal. If P-09 is changed, the value is reset to default.	15.0 Hz

Parameter	Designation	Min. value	Max. value	Description	DS
P-21	f-Fix2	P-02	P-01	Preset Fixed Frequency 2 Value can be adjusted between f-min and f-max. Selection via a digital control signal. If P-09 is changed, the value is reset to default.	0.0 Hz
P-22	f-Fix3	P-02	P-01	Preset Fixed Frequency 3 Value can be adjusted between f-min and f-max. Selection via a digital control signal. If P-09 is changed, the value is reset to default.	0.0 Hz
P-23	f-Fix4	P-02	P-01	Preset Fixed Frequency 4 Value can be adjusted between f-min and f-max. Selection via a digital control signal. If P-09 is changed, the value is reset to default.	0.0 Hz
P-24	t-QuickDec	0.00 s	600.0 s	Quick Stop Ramp In default the second deceleration ramp is activated by applying voltage to DI1 and DI2 (terminals 2 and 3) at the same time	0.00 s
P-25	AO1 Function	0	12	Select Signal to show on the analog output P-25 = 0, …, 7, 10, 11 = digital output 0: RUN, enable (FWD/REV) 1: READY, DC1…E1 ready for operation 2: Speed = speed reference value 3: Fault (DC1…E1 not ready) 4: Speed ≧ RO1 Upper Limit (P-19) 5: Motor current ≧ RO1 Upper Limit (P-19) 6: Speed < RO1 Upper Limit (P-19) 7: Motor current < RO1 Upper Limit (P-19) 8: Output Frequency (0 - 100 % f-max (P-01)) 9: Motor current (0 - 200 % Motor Nom Current (P-08)) 10: Drive not enabled 11: Speed not at reference value P-25 = 8, 9, 12 = analog output 12: Motor power	8
P-26	f-SkipBand1	0.0 Hz	P-01	Skip frequency band width Defines the frequency range around f-Skip1 in which the drive doesn't work in steady-state to avoid mechanical resonances in the application. During acceleration and deceleration this range is passed through by using the ramps set with P-03 and P-04.	0.0 Hz
P-27	f-Skip1	0.0 Hz	P-01	Centre point of the frequency band defined by f-Skip-Band1 in which the drive doesn’t work in steady-state.	0.0 Hz
P-28	V-MidV/f	0 V	P-07	Voltage to shape V/f curve Defines the adjustment voltage at the frequency set in P-29.	0 V
P-29	f-MidV/f	0 Hz	P-09	Frequency to shape V/f curve Sets the frequency at which the adjustment voltage defined with P-28 is applied to the motor.	0 Hz

Parameter	Designation	Min. value	Max. value	Description	DS
P-30	Start Mode	0	6	Defines the behaviour of the drive relating to the enable digital input and also configures the automatic restart function. Edge-r : Following power on or reset, the drive will not start if a start signal (FWD/REV) is still present. To start DC1 a rising edge is necessary. Auto-0 : Following a power on or reset, the drive will automatically start if digital input 1 is closed. Auto-1 to 5: Following a trip, the drive will make up to 5 attempts to restart at 25 second intervals. The drive must be powered down to reset the counter. The number of restart attempts are counted, and if the drive fails to start on the final attempt, the drive will trip, and will require the user to manually reset the fault. **Attention:** An automatic restart is only possible when the control commands are given via terminals (P-12 = 0 and P-12 = 11 when, after a communication loss, the control is toggled to the terminals).	0
P-31	Digital Reference Reset Mode	0	7	Defines the behavior of the drive on START when used in Keypad control or when controlled with UP/DOWN commands via terminals. 0: Start at min speed 1: Start with latest speed before switching off 2: Start at min speed (Auto-r) 3: Start with latest speed before switching off (Auto-r) 4: Start with current running speed 5: Start with f-Fix4 6: Start with current running speed (Auto-r) 7: Start mit f-Fix4 (Auto-r) Auto r: START and STOP button on the keypad are disabled. DC1…E1 starts with a START command at the terminals.	1
P-32	t-DCBrake@Stop	0.0 s	25.0 s	Duration of DC braking at Stop and before Start. Setting “0” disables DC braking. The braking level is set with P-68.	0.0 s
	DCBrake	0	2	Sets the instances when DC braking is enabled. 0: DC braking on Stop 1: DC braking before Start 2: DC braking before Start and on Stop	0
P-33	Spin Start Enable	0	2	Spin Start Enable Enables spin start, where the drive starts from the detected motor speed. A short start delay is possible if the rotor is stationary. Recommended for applications where the motor spins when applying the FWD/REV signal to the drive (high inertia loads, fans, …) 0: Spin start disabled 1: Spin start enabled 2: Spin start enabled on trip, brown our coast to stop (P-05 = 1) **Hint:** The setting of P-33 will be adopted at a change of P-13 (P-33 = 0 when P-13 = 0 or 1, P-33 = 2 when P-13 = 2)	0

Parameter	Designation	Min. value	Max. value	Description	DS
P-34	Brake Chopper	0	4	Enable Brake Chopper Enables Brake Chopper on sizes FS2 up to FS4. Software protection can be selected for brake resistors with a 200 W rating. 0: Disabled 1: Enabled with software protection 2: Enabled without software protection 3: Enabled during speed reference change with software protection 4: Enabled during speed reference change without software protection **Hint:** This parameter can only be set to a value > 0 on drives sizes FS2 to FS4. Size FS1 does not have a brake chopper inside the drive.	0
P-35	AI1 Gain	0.00 %	2000.00 %	Scaling of the Analog Input 1 Output value = Input value * Scaling. **Example:** P-16 = 0 - 10 V, P-35 = 200 %: at 5 V the motor turns with max speed (P-01) (5 V * 200 % = 10 V)	100.00 %
P-36	RS485-0 Address	1	63	RS485-0 Address	1
	RS485-0 Baudrate	0	6	RS485 Baudrate 2: 9.6 kBit/s 3: 19.2 kBit/s 4: 38.4 kBit/s 5: 57.6 kBit/s 6: 115.2 kBit/s	6
	Modbus RTU0 COM Timeout	0	8	Modbus RTU COM Timeout Time between a communication loss and the resulting action. Setting "0" disables the action after communications trip. t: indicates the drive will trip if time exceeded. r: indicates the drive will ramp to stop if time exceeded. 0: no action 1: t 30 ms 2: t 100 ms 3: t 1000 ms 4: t 3000 ms 5: r 30 ms 6: r 100 ms 7: r 1000 ms 8: r 3000 ms	4
P-37	Access Key Level2	0	9999	Defines the password which is used to get access to extended parameter set (Level 2). In addition, it also defines the password needed to get access to the advanced parameter set (P-37 + 100). Access via P-14.	101
P-38	Parameter Lock	0	1	Determines whether to lock the parameters 0: OFF. All parameters can be accessed and changed 1: ON. Parameter values can be displayed, but cannot be changed. If a remote keypad is connected, parameters cannot be accessed by the remote keypad if they are locked.	0

Para-meter	Designation	Min. value	Max. value	Description	DS
P-39	AI1 Offset	-500.00 %	500.00 %	Offset Analog Input 1 Resolution 0.1 %	0.00 %
P-40	Display Scale	0.000	16000 %	Scale factor display Customer specific scaling factor. With P-40 > 0 a "c" appears on the left hand side of the display. With P-10 = 0 the scaling factor is applied to the frequency, with P-10 > 0, to the speed. The value is displayed in real-time on the drives display.	0.000
	Display Scale Source	0	3	Source to Scale factor display Source of the displayed value 0: Motor speed 1: Motor current 2: Analog Input AI2 3: PI controller feedback	0
P-41	PID1 Kp	0.0	30	PI(D) controller proportional gain Higher values will result in a larger change at the frequency inverter output frequency as a response to small changes in the feedback. Too high value can cause instability	1
P-42	PID1 Ti	0.0 s	30.0 s	PI(D) controller integral time constant Higher values will result in a more damped response. Used in systems in which the overall process responds slowly.	1.0 s
P-43	PID1 Mode	0	1	PI(D) controller 1 mode 0: direct mode. This setting is used when an increase of the feedback signal should lead to a decrease of the motor speed. When the controller is activated after a standby, its output is set to 0 %. 1: inverse mode. If an increasing feedback signal should increase the speed of the motor, use inverse mode. When the controller is activated after a standby, its output is set to 0 %. 2: direct mode. This setting is used when an increase of the feedback signal should lead to a decrease of the motor speed. When the controller is activated after a standby, its output is set to 100 %. 3: inverse mode. If an increasing feedback signal should increase the speed of the motor, use inverse mode. When the controller is activated after a standby, its output is set to 100 %.	0
P-44	PID1 Set Point 1 Source	0	1	Defines the set point source 1 of controller 1 0: digital set point signal, set with P-45 1: analog input 1	0
P-45	PID1 Set Point Digital	0.0 %	100.0 %	Digital set point controller 1 Digital set point of the PI controller in case P44 = 0	0.00 %
P-46	PID1 Feedback 1 Source	0	5	Defines the feedback source 1 of controller 1 0: analog input 2 (AI2) 1: analog input 1 (AI1) 2: motor current 3: DC-link voltage 4: difference AI1 - AI2 5: max value of AI1 and AI2	0

Parameter	Designation	Min. value	Max. value	Description	DS
P-47	AI2 Signal Range	0	6	Configures the Analog input 2 for the selected signal source type. 0: 0 - 10 V 1: 0 - 20 mA 2: t 4 - 20 mA (Trips in case of wire break) 3: r 4 - 20 mA (Ramps to f-fix1 (P-20) in case of wire break) 4: t 20 - 4 mA (Trips in case of wire break) 5: r 20 - 4 mA (Ramps to f-fix1 (P-20) in case of wire break) 6: Ptc-th (connection of a thermistor for motor protection)	0
P-48	t-Standby	0.0 s	25.0 s	Time after which the drive changes to stand by mode (inverter output disabled) when running at min speed (f-min) 0: Standby mode disabled non-zero: enter standby mode after the time specified in this parameter. Operation automatically resumes as soon as the speed set point increases above P-02.	0.0 s
P-49	PID1 WakeUpLevel	0.0 %	100.0 %	Wake-up level controller 1 Sets an error level (difference between the PID reference and feedback values) above which the PID controller will wake from Standby mode. Sets an error level (difference between PI set point and feedback values) above which the PI controller will wake from standby mode.	0.0 %
P-50	CAN0 Baudrate	0	5	CANopen Baudrate Sets the Baudrate in case CANopen is used 0: 125 kBit/s 1: 250 kBit/s 2: 500 kBit/s 3: 1 MBit/s 4: 50 kBit/s 5: 20 kBit/s	2
P-51	T-Memory Enable	0	1	When enabled, the motor thermal memory retention function will save the calculated motor thermal history on drive power down, using this saved value as the starting value on next power up. If this function is disabled, the motor thermal history is reset to zero on every power up. 0: Thermal memory disabled 1: Thermal memory enabled	1
P-52	ParameterAccess	0	1	Parameter Access 0: All parameters can be changed by any source. 1: All parameters locked; can only be changed by the SWD Device.	0
P-53	Action@Communication Loss	0	4	Device reaction after occuring of “Communication Loss”. Possibilities device dependent Drive reaction after communication loss. Master communication loss delay time is set by ”Modbus RTU0 COM Timeout” (P-36) 0: No reaction, continue work 1: Set warning, continue work 2: stop (if ramp enabled) 3: quick stop 4: coast stop	0

Para-meter	Designation	Min. value	Max. value	Description	DS
P-54	RO1 Hysteresis	0.0 %	100.0 %	Hysteresis for relay output 1 This parameter defines a lower reaction threshold level in case P-18 is set to 4, …, 7. Threshold level = limit (P-19) - hysteresis (P-54) P-18 = 4 or 5: output will be logic 1 if the value ≧ limit , output will be logic 0 if value < level P-18 = 6 or 7: output will be logic 0 if the value ≧ limit, output will be logic 1 if value < level	0.0 %
P-55	RO1 Switch-On Delay	0.0 s	250.0 s	Delay time before the Relay switches from logic 0 to logic 1.	0.0 s
P-56	RS485-0 ParityType	0s	3	Modbus Parity Type 0: No parity, 1 stop bit (N-1) 1: No parity, 2 stop bits (N-2) 2: Odd parity, 1 stop bit (O-1) 3: Even parity, 1 stop bit (E-1)	0
P-57	TCP Enable Service	0	7	Cyber Security Enable communications interfaces This is a bitmap parameter where: 0000b = All services disabled xxx1b = reserved xx1xb = TFTP/FTP server enabled x1xxb = reserved	0
P-58	TCP0 SecurityTimeout	0 s	60 min	If set to 0, then cyber security settings will not change. Otherwise, the cyber security option in P-57 will be reset to 0 after time delay definied by P-58.	10 min

5.6.4 “Advanced” parameter group

Table 55: “Advanced” parameter group

Parameter	Designation	Min. value	Max. value	Description	DS
P-60	Motor Control Mode	0	4	Motor Control Mode An autotune must be performed if setting 2 up to 4 is used. It is recommended with setting 0 0: Speed Control with Torque Limit (vector) 1: Speed Control (V/f) 2: PM Motor Speed Control 3: Brushless DC Motor Speed Control 4: SyncRel Motor Speed Control	1
P-61	Motor Identification	0	1	Motor Identification When set to 1, the drive immediately carries out a non-rotating autotune to measure the motor parameters for optimum control and efficiency. Following completion of the autotune, the parameter automatically returns to 0. Remark: This function cannot be activated by using the drivesConnect software!	0
P-62	MSC Gain	0.00 %	200.00 %	Speed controller Gain for Kp and Ti as combined value	50.00 %
P-63	I-CurrentLimit	0.00 %	175 %	Defines the maximum current limit during operation. The percentage value belongs to the motor current set in P-08.	150 %
P-64	Motor Stator Resistance R1	0.00 Ohm	655.35 Ohm	Stator resistance of the motor For induction and PM motors: phase to phase resistance value [Rs] in Ohms. This value is determined during the motor identification run.	f(I_e)
P-65	Motor Stator Inductance d-Axis	0.0 mH	6553.5 mH	Stator inductance of the motor, torque producing For induction motors: Phase to phase inductance value in Henry [H] For PM-Motors: phase d-axis inductance value [Lsd] in Henry [H]	f(I_e)
P-66	Motor Stator Inductance q-Axis	0.0 mH	6553.5 mH	Stator inductance of the motor, magnetizing For PM-Motors: phase d-axis inductance value [Lsd] in Henry [H]	f(I_e)
P-67	f-DCBrake@Stop	0.0 Hz	P-01	Output frequency in Hz at which DC braking starts during the deceleration phase. If “Stop Mode” is set to coasting, DC braking starts at stop command immediately.	0.0 Hz
P-68	DC-Brake Current	0.0 %	100.0 %	Amount of DC current as a percentage of the “Motor Nom Current” that is injected into the motor during DC braking.	20.0 %
P-69	LocalControl Logic1	0	4	0: Terminal 2 or Switch Forward 1: Terminal 2 only 2: Terminal 2 or Switch Forward or Switch Reverse 3: Terminal 2 and (Switch Forward or Reverse) 4: Terminal 2 and Switch Forward	0
P-70	LocalControl Logic2	0	2	0: Terminal 3 or Switch Reverse 1: Terminal 3 2: Terminal 3 and Switch Reverse	0

6 Technical Data

6.1 General rating data

Technical data	Symbol	Unit	Value
General			
Standards			EMC: EN 61800-3:2004+A1-2012 Radio interference: EN 55011: 2010 Security: EN 61800-5: 2007 Degree of protection: EN 60529: 1992 Soiling: IEC 721-3-3 IP66: UV Resistance: BS ISO 4892-2:2013
Certifications and manufacturer's declarations on conformity			CE, UL, cUL, c-Tick, UkrSEPRO, Gost-R
EcoDesign 2009/125/EC			→ Eaton.com/EcoDesign-VFD
Production quality			RoHS, ISO 9001
Climatic proofing	ρ_w	%	< 95 %, average relative humidity (RH), non-condensing (EN 50178)
Ambient air temperature			
Operational			
IP20 (NEMA 0)	ϑ	°C	-10 - +50 without derating -10 - +45 for DC1-12011… and DC1-32011…, for UL compliance over a period of 24 hours
IP66 (NEMA 4X)	ϑ	°C	-20 - +40 without derating
Storage	ϑ	°C	-40 - +60 (frost-free and condensation-free)
Pollution degree			Non-conductive dust permissible
Transport			IP20: Class 1C2 (chemical gases), Class 1S2 (solid particles) IP66: Class 1C3 (chemical gases), Class 1S3 (solid particles)
Storage			IP20: Class 2C2 (chemical gases), Class 2S2 (solid particles) IP66: Class 2C3 (chemical gases), Class 2S3 (solid particles)
Operational			IP20: Class 3C2 (chemical gases), Class 3S2 (solid particles) IP66: Class 3C3 (chemical gases), Class 3S3 (solid particles)
Vibration level (not evaluated during operation)			
Shock test			
Pulse shape			Half sinus
Top acceleration			15 g
Time Window			11 ms
Vibration test			
Frequency range	f	Hz	10 - 150 10 - 57.55: 0.15 mm peak-peak 57.55 - 150: 1 g Top acceleration
Vibration evaluation			1 octave/minute
MTBF (mean time between failures)		Years	157
Electrostatic discharge (ESD, EN 61000-4-2:2009	U	kV	±4, contact discharge ±8, air discharge

Technical data	Symbol	Unit	Value
Fast transient burst (EFT/B, EN 61000-4-4: 2004)	U	kV	±1, at 5 kHz, control signal terminal ±2, at 5 kHz, motor connection terminals, single-phase mains connection terminals ±4, at 5 kHz, three-phase mains connection terminals
Overvoltage (surge, EN 61000-4-5: 2006)			
110 - 115 V, 200 - 240 V	U	kV	±1, phase to phase/neutral conductor ±2, phase/neutral conductor to earth
380 - 480 V	U	kV	±2, phase to phase ±4, phase to earth
Electric strength (flash, EN 61800-5-1: 2007)			
110 - 115 V, 200 - 240 V	U	kV	1.5
380 - 480 V	U	kV	2.5
Radio interference class (EMC)			
Maximum screened motor cable length with integrated radio interference suppression filter			
Category C1	I	m A	1, only for DC1-122D3F… to DC1-12011F…(FS1, FS2)
Category C2	I	m A	5
Category C3	I	m A	25
Mounting position			vertical
Altitude	h	m A	0 - 1000 above sea level, > 1000 with 1% load current reduction every 100 m, maximum 2000 with UL approval, maximum 4000 without UL approval
Degree of protection			IP20 (NEMA 0) / IP66 (NEMA 4X)
Protection against contact			BGV A3 (VBG4, finger- and back-of-hand proof)
Main circuit / power section			
Feeder unit			
Rated operating voltage			
DC1-1D…	U_e	V	1~ 110 (110 V - 10 % - 115 V +10 %, → U_2 = 230 V)
DC1-12…	U_e	V	1~ 230 (200 V -10 % - 240 V +10 %)
DC1-32…	U_e	V	3~ 230 (200 V -10 % - 240 V +10 %)
DC1-34…	U_e	V	3~ 400 (380 V -10 % - 480 V +10 %)
Single-phase power supply with DC1-3… units			When powered with a single-phase power supply, variable frequency drives from the DC1-32… and DC1-34... series can be operated with a maximum of 50 % of the nominal device current (I_e).
Mains frequency	f	Hz	50/60 ±10 %
Phase Imbalance		%	max. 3
Maximum short-circuit current (supply voltage)	SCCR	kA	100
Mains switch-on frequency			Maximum of one time every 30 seconds

Technical data	Symbol	Unit	Value
Mains network configuration (AC supply system)			TN and TT network with directly earthed neutral point. IT earthing systems with PCM insulation monitoring relays only. Operation on phase-earthed networks is only permissible up to a maximum phase-earth voltage of 300 V AC.
Inrush current	I	A	< I_{LN}
Motor feeder			
Output voltage			
DC1-1D…	U_2	V	3~ 0 - 2 x U_e (voltage doubler)
DC1-12…, DC1-32…, DC1-34…	U_2	V	3~ 0 - U_e
Assigned motor output			
at 230 V, 50 Hz	P	kW	0.37 - 4
at 400 V, 50 Hz	P	kW	0.75 - 22
Output Frequency			
Range, parameterizable	f_2	Hz	0 - 50/60 (max. 500 Hz)
resolution		Hz	0.1
Rated operation current	I_e	A	2.3 - 46
Overload current for 60 s every 600 s	i_l	%	150
Overload current for 2.5 s every 600 s	i_l	%	175
Switching frequency (double modulation)	f_{PWM}	kHz	max. 32
Operating mode			
V/Hz control (speed accuracy)			±20 %, with slip compensation
Vector control (static speed accuracy)			±0.033 % ±1% load range: 0 - 100 %
Torque response time	t_r	ms	1 - 8
Torque linearity			±5 % (10 - 90 % of speed variable range, 20 - 100% of torque load range)
Response time (enable IGBT)	t_r	ms	< 10
DC braking			
Time before start	t	s	0 - 25, in the event of a stop
Motor pick-up control function (for catching spinning motors)			all frame sizes
Brake chopper			only for sizes FS2 to FS4
Braking current during continuous operation		%	100 (I_e)
Maximum braking current		%	150 for 60 s

Technical data	Symbol	Unit	Value
Control section			
Control Voltage			
Output voltage (control signal terminal 1)	U_C	V DC	24
Load rating (control signal terminal 1)	I_1	mA	100
Reference voltage (control signal terminal 5)	U_S	V DC	10
Load rating (control signal terminal 5)	I_5	mA	10
Digital Input (DI)			
Quantity			2 - 4
Logic (level)			increase (NPN)
Response time	t_r	ms	< 8
Input voltage range High (1)	U_C	V DC	8 - 30
Input voltage range Low (0)	U_C	V DC	0 - 4
Analog Input (AI)			
Quantity			0 - 2
resolution			12-bits
accuracy		%	< 1 to the final value
Response time	t_r	ms	< 16
Input voltage range	U_S	V	0 - 10, DC (R_i ~ 72 kΩ)
Input current range	I_S	mA	0/4 - 20 (R_B ~ 500 Ω)
Relay output (RO1)			
Quantity			1 relay
Relay contact			N.O.
Switching capacity			
AC	I	A	6 (250 V AC)
DC	I	A	5 (30 V AC)
Digital Output (DO)			
Quantity			0 - 1
Output voltage	U_{Out}	V	+24
Load rating (control signal terminal 8)	I_8	mA	20 max.
Analog Output (AO)			
Quantity			0 - 1
Output voltage	U_{Out}	V	0 - +10
Load rating (control signal terminal 8)	I_8	mA	20 max.
resolution		Bit	10
accuracy		%	< 1 to the final value
Interface (RJ45)			OP bus, Modbus RTU, CANopen, RS485
Response time (after valid command)	t_r	ms	< 8 (Modbus, CANopen) < 8 (OP bus: Master slave, 60 ms cycle)

6.2 Specific rated operational data

The following tables list the specific rated operational data for the individual DC1 series based on the corresponding rated operational current.

Examples

DC1-1D 2D3 ...

- **Rated operational current** (2D3 ≙ 2.3 A)
- **DC1 series**
  (1D = Single-phase mains connection, 115 V, with voltage doubler)

DC1-12 7D0 FB ...

- **Power section characteristics**
  NN = without radio interference suppression filter, without brake chopper
  FN = with radio interference suppression filter, without brake chopper
  NB = without radio interference suppression filter, with brake chopper
  FB = with radio interference suppression filter, with brake chopper
- **Rated operational current** (7D0 ≙ 7.0 A)
- **DC1 device series**
  (12 = single-phase mains connection (230 V)

DC1-32 046 ...

- **Rated operational current** (046 ≙ 46 A)
- **DC1 device series**
  (32 = three-phase mains connection, 230 V)
  (34 = three-phase mains connection, 400 V)

6.2.1 DC1-1D…device series

Variable frequency drives with voltage doubler

$U_{LN} = 2 \times U_2$: 115 V → 230 V

Size	Symbol	Unit	2D3	4D3	5D8
Rated operational current	I_e	A	2.3	4.3	5.8
Overload current for 60 s every 600 s	i_l	A	3.45	6.45	8.7
Overload current for 2.5 s every 600 s	i_l	A	4.03	7.53	10.15
Apparent power at rated operation[1] 230 V	S	kVA	0.92	1.71	2.31
Assigned motor power					
at 230 V, 50 Hz	P	kW	0.37	0.75	1.1
at 220 - 240 V, 60 Hz	P	HP	0.5	1	1.5
Power side (primary side):					
Number of phases			single-phase or two-phase		
Rated operating voltage	U_{LN}	V	110 (-10 %) - 115 (+10 %) 48 - 62 Hz 99 - 126 ±0 %		
Input current (phase current)	I_{LN}	A	7.8	15.8	21.9
Minimum braking resistance	R_B	Ω	–	–	100
Switching frequency (pulse frequency)					
Default Setting	f_{PWM}	kHz	8	8	8
Setting range	f_{PWM}	kHz	4 - 32	4 - 32	4 - 32
Voltage Boost (U_{Boost}/U_{LN})					
Default Setting		%	3	3	2.5
Max Value		%	25	25	20
Maximum leakage current to earth (touch current), at U_{LN}: 120 V, without motor	I_{Touch}	mA	4.8	4.8	4.8
Efficiency	η		0.95	0.95	0.95
Heat dissipation					
At I_e (150 %)	P_V	W	18.5	37.5	44
During no-load running, standby (locked, without fan)	P_V	W	3.07	3.07	4.51
Fan			–	✓ [1]	✓ [1]
Size			FS1	FS1	FS2

1) Not with IP66 degree of protection

6.2.2 DC1-12…device series

Size	Symbol	Unit	2D3	4D3	7D0NN 7D0FN	7D0NB 7D0FB	011	015
Rated operational current	I_e	A	2.3	4.3	7	7	10.5	15
Overload current for 60 s every 600 s	i_I	A	3.45	6.45	10.5	10.5	15.75	22.5
Overload current for 2.5 s every 600 s	i_I	A	4.03	7.53	12.25	12.25	18.38	26.25
Apparent power at rated operation 230 V	S	kVA	0.92	1.71	2.79	2.79	4.18	5.98
Apparent power at rated operation 240 V	S	kVA	0.96	1.79	2.91	2.91	4.36	6.24
Assigned motor power								
at 230 V, 50 Hz	P	kW	0.37	0.75	1.5	1.5	2.2	4
at 220 - 240 V, 60 Hz	P	HP	0.5	1	2	2	3	5
Power side (primary side):								
Number of phases			single-phase or two-phase					
Rated operating voltage	U_{LN}	V	200 - 10 % - 240 + 10 %, 50/60 Hz 180 - 264 ±0 %, 48 - 62 Hz ±0 %					
Input current (phase current)	I_{LN}	A	3.7	7.5	12.9	12.9	19.2	29.2
Minimum braking resistance	R_B	Ω	–	–	–	100	50	25
Switching frequency (pulse frequency)								
Default Setting	f_{PWM}	kHz	8	8	8	8	8	8
Setting range	f_{PWM}	kHz	4 -32	4 -32	4 -32	4 -32	4 -32	4 -24
Voltage Boost (U_{Boost}/U_{LN})								
Default Setting		%	3	3	3	2.5	2.5	2
Max Value		%	25	25	25	20	20	15
Maximum leakage current to earth (PE), at U_{LN}: 240 V, without motor	I_{PE}	mA	4.8	4.8	4.8	4.8	4.8	4.7
Efficiency	η		0.95	0.94	0.96	0.96	0.95	0.96
Heat dissipation								
At I_e (150 %)	P_V	W	18.5	45.75	63	63	103.4	160
During no-load running, standby (locked, without fan)	P_V	W	3.07	3.07	3.07	4.51	4.51	5.16
Fan			–	✓ 1)	✓ 1)	✓ 1)	✓ 1)	✓ 1)
Size			FS1	FS1	FS1	FS2	FS2	FS3

1) Not with IP66 degree of protection

6.2.3 DC1-32… device series

Size	Symbol	Unit	2D3	4D3	7D0NN	7D0NB 7D0FB
Rated operational current	I_e	A	2.3	4.3	7	7
Overload current for 60 s every 600 s	i_l	A	3.45	6.45	10.5	10.5
Overload current for 2.5 s every 600 s	i_l	A	4.03	7.53	12.25	12.25
Apparent power at rated operation 230 V	S	kVA	0.92	1.71	2.79	2.79
Apparent power at rated operation 240 V	S	kVA	0.96	1.79	2.91	2.91
Assigned motor power						
at 230 V, 50 Hz	P	kW	0.37	0.75	1.5	1.5
at 220 - 240 V, 60 Hz	P	HP	0.5	1	2	2
Power side (primary side):						
Number of phases			3	3	3	3
Rated operating voltage	U_{LN}	V	200 - 10 % - 240 + 10 %, 50/60 Hz 180 - 264 ±0 %, 48 - 62 Hz ±0 %			
Input current (phase current)	I_{LN}	A	3.4	5.6	9.5	8.9
Minimum braking resistance	R_B	Ω	–	–	–	100
Switching frequency (pulse frequency)						
Default Setting	f_{PWM}	kHz	8	8	8	8
Setting range	f_{PWM}	kHz	4 -32	4 -32	4 -32	4 -32
Voltage Boost (U_{Boost}/U_{LN})						
Default Setting		%	3	3	3	2.5
Max Value		%	25	25	25	20
Maximum leakage current to earth (touch current), at U_{LN}: 240 V, without motor	I_{Touch}	mA	7.5	7.5	7.5	7.2
Efficiency	η		0.96	0.95	0.96	0.96
Heat dissipation						
At I_e (150 %)	P_V	W	14.8	39.75	61.5	61.5
During no-load running, standby (locked, without fan)	P_V	W	3.07	3.07	3.07	4.51
Fan			–	✓ 1)	✓ 1)	✓ 1)
Size			FS1	FS1	FS1	FS2

1) Not with IP66 degree of protection

DC1-32… device series

Continue

Size	Symbol	Unit	011	018	024	030	046
Rated operational current	I_e	A	10.5	18	24	30	46
Overload current for 60 s every 600 s	i_l	A	15.75	27	36	45	69
Overload current for 2.5 s every 600 s	i_l	A	18.38	31.5	42	52.5	80.5
Apparent power at rated operation 230 V	S	kVA	4.18	7.17	9.55	11.94	18.30
Apparent power at rated operation 240 V	S	kVA	4.36	7.48	9.96	12.46	19.10
Assigned motor power							
at 230 V, 50 Hz	P	kW	2.2	4	5.5	7.5	11
at 220 - 240 V, 60 Hz	P	HP	3	5	7.5	10	15
Power side (primary side):							
Number of phases			3	3	3	3	3
Rated operating voltage	U_{LN}	V	200 - 10 % - 264 + 10 %, 50/60 Hz 180 - 264 ±0 %, 48 - 62 Hz ±0 %				
Input current (phase current)	I_{LN}	A	12.1	20.9	26.4	33.3	50.1
Minimum braking resistance	R_B	Ω	50	25	20	15	10
Switching frequency (pulse frequency)							
Default Setting	f_{PWM}	kHz	8	8	8	8	8
Setting range	f_{PWM}	kHz	4 -32	4 -24	4 -24	4 -24	4 -24
Voltage Boost (U_{Boost}/U_{LN})							
Default Setting		%	2.5	2	2	1.5	1.5
Max Value		%	20	15	15	10	10
Maximum leakage current to earth (touch current), at U_{LN}: 240 V, without motor	I_{Touch}	mA	7.2	6.8	6.8	6.9	6.9
Efficiency	η		0.96	0.96	0.97	0.97	0.96
Heat dissipation							
At I_e (150 %)	P_V	W	90.2	160	223	304	446
During no-load running, standby (locked, without fan)	P_V	W	4.51	5.16	5.16	7.54	7.54
Fan			✓ 1)	✓ 1)	✓ 1)	✓	✓
Size			FS2	FS3	FS3	FS4	FS4

1) Not with IP66 degree of protection

6.2.4 DC1-34…device series

Size	Symbol	Unit	2D2	4D1NN 4D1FN	4D1NB 4D1FB	5D8	9D5
Rated operational current	I_e	A	2.2	4.1	4.1	5.8	9.5
Overload current for 60 s every 600 s	i_l	A	3.3	6.15	6.15	8.7	14.25
Overload current for 2.5 s every 600 s	i_l	A	3.85	7.18	7.18	10.15	16.63
Apparent power at rated operation 400 V	S	kVA	1.52	2.84	2.84	4.02	6.58
Apparent power at rated operation 480 V	S	kVA	1.83	3.41	3.41	4.82	7.9
Assigned motor power							
at 400 V, 50 Hz	P	kW	0.75	1.5	1.5	2.2	4
at 460 V, 60 Hz	P	HP	1	2	2	3	5
Power side (primary side):							
Number of phases			3	3	3	3	3
Rated operating voltage	U_{LN}	V	380 V - 10 % - 480 V + 10 %, 50/60 Hz 342 - 528 V ±0 %, 48 - 62 Hz ±0 %				
Input current (phase current)	I_{LN}	A	3.5	5.6	5.6	7.5	11.5
Minimum braking resistance	R_B	Ω	–	–	250	200	120
Switching frequency (pulse frequency)							
Default Setting	f_{PWM}	kHz	8	8	8	8	8
Setting range	f_{PWM}	kHz	4 - 32	4 - 32	4 - 32	4 - 32	4 - 32
Voltage Boost (U_{Boost}/U_{LN})							
Default Setting		%	3	3	2.5	2.5	2.5
Max Value		%	25	25	20	20	20
Maximum leakage current to earth (touch current), at U_{LN}: 400 V, without motor	I_{Touch}	mA	13	13	12.6	12.6	12.6
Efficiency	η		0.92	0.95	0.95	0.95	0.97
Heat dissipation							
At I_e (150 %)	P_V	W	33.75	66.5	66.5	101.2	136
During no-load running, standby (locked, without fan)	P_V	W	4.55	4.55	6.44	6.44	6.44
Fan			✓ 1)	✓ 1)	✓ 1)	✓ 1)	✓ 1)
Size			FS1	FS1	FS2	FS2	FS2

1) Not with IP66 degree of protection

DC1-34…device series

Continue

Size	Symbol	Unit	014	018	024	030	039	046
Rated operational current	I_e	A	14	18	24	30	39	46
Overload current for 60 s every 600 s	i_l	A	21	27	36	45	58.5	69
Overload current for 2.5 s every 600 s	i_l	A	24.5	31.5	42	52.5	68.25	80.5
Apparent power at rated operation 400 V	S	kVA	9.67	12.47	16.63	20.76	26.99	31.83
Apparent power at rated operation 480 V	S	kVA	11.64	14.96	19.95	24.91	32.39	38.20
Assigned motor power								
at 400 V, 50 Hz	P	kW	5.5	7.5	11	15	18.5	22
at 460 V, 60 Hz	P	HP	7.5	10	15	20	25	30
Power side (primary side):								
Number of phases			3	3	3	3	3	3
Rated operating voltage	U_{LN}	V	380 V - 10 % - 480 V + 10 %, 50/60 Hz 342 - 528 V ±0 %, 48 - 62 Hz ±0 %					
Input current (phase current)	I_{LN}	A	17.2	21.2	27.5	34.2	44.1	51.9
Minimum braking resistance	R_B	Ω	100	80	50	30	22	22
Switching frequency (pulse frequency)								
Default Setting	f_{PWM}	kHz	8	8	8	8	8	8
Setting range	f_{PWM}	kHz	4 - 24	4 - 24	4 - 24	4 - 24	4 - 24	4 - 24
Voltage Boost (U_{Boost}/U_{LN})								
Default Setting		%	2	2	2	2	1.5	1.5
Max Value		%	15	15	15	10	10	10
Maximum leakage current to earth (touch current), at U_{LN}: 400 V, without motor	I_{Touch}	mA	12.7	12.7	12.7	12.9	12.9	12.9
Efficiency	η		0.96	0.97	0.97	0.97	0.97	0.96
Heat dissipation								
At I_e (150 %)	P_V	W	223	304	446	607	728	801
During no-load running, standby (locked, without fan)	P_V	W	6.42	6.42	6.52	14.6	14.6	14.6
Fan			✓ 1)	✓ 1)	✓ 1)	✓	✓	✓
Size			FS3	FS3	FS3	FS4	FS4	FS4

1) Not with IP66 degree of protection

6.3 Dimensions

6.3.1 Sizes FS1 to FS3 in IP20

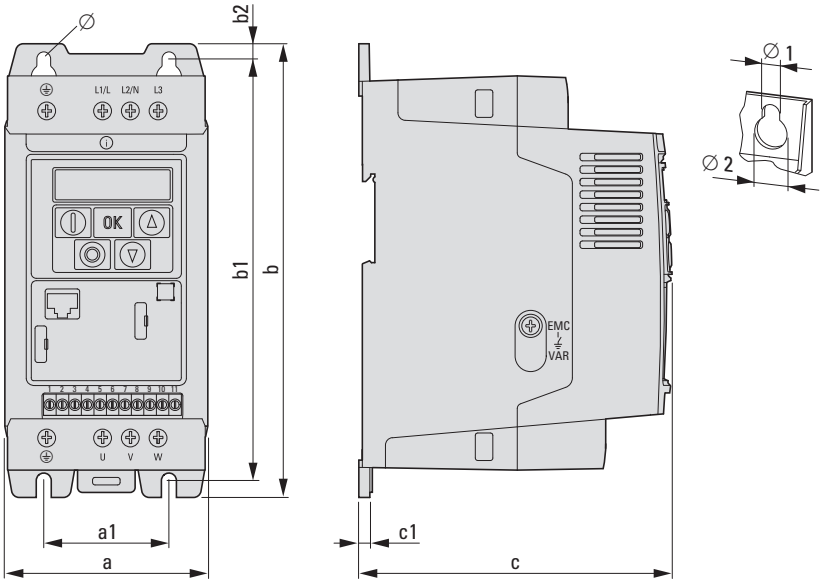

Figure 78: Dimensions for DC1 with IP20 degree of protection (NEMA 0)

Table 56: Dimensions, weights, and sizes for IP20

Size	a mm (in)	a1 mm (in)	b mm (in)	b1 mm (in)	b2 mm (in)	c mm (in)	c1 mm (in)	Ø1 mm (in)	Ø2 mm (in)	m kg (lbs)
FS1	81 (3.19)	50 (1.97)	184 (7.24)	170 (6.69)	7 (0.28)	124 (4.88)	4 (0.16)	6 (0.25)	12 (0.47)	1.1 (2.4)
FS2	107 (4.21)	75 (2.95)	231 (9.09)	215 (8.46)	8 (0.31)	152 (5.98)	5 (0.2)	6 (0.25)	12 (0.47)	2.6 (5.7)
FS3	131 (5.16)	100 (3.94)	273 (10.75)	255 (10.04)	8.5 (0.33)	175 (6.89)	5 (0.2)	6 (0.25)	12 (0.47)	4 (8.8)

1 in = 1'' = 25.4 mm, 1 mm = 0.0394 in

6.3.2 Size FS4 in IP20

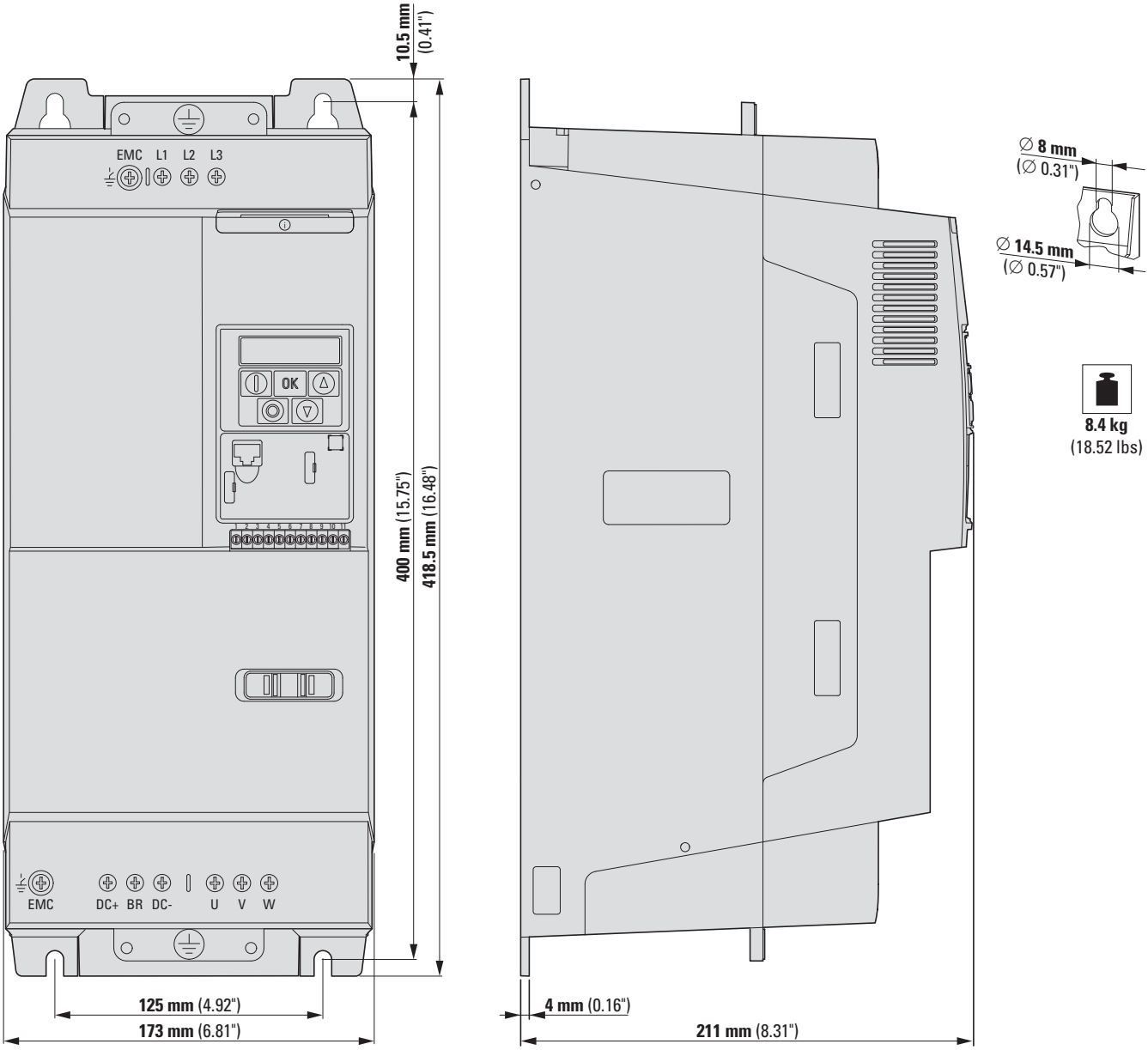

Figure 79: Dimensions and weight for DC1 with frame size of FS4 and IP20 (NEMA 0) degree of protection

6.3.3 Sizes FS1 to FS4 in IP66

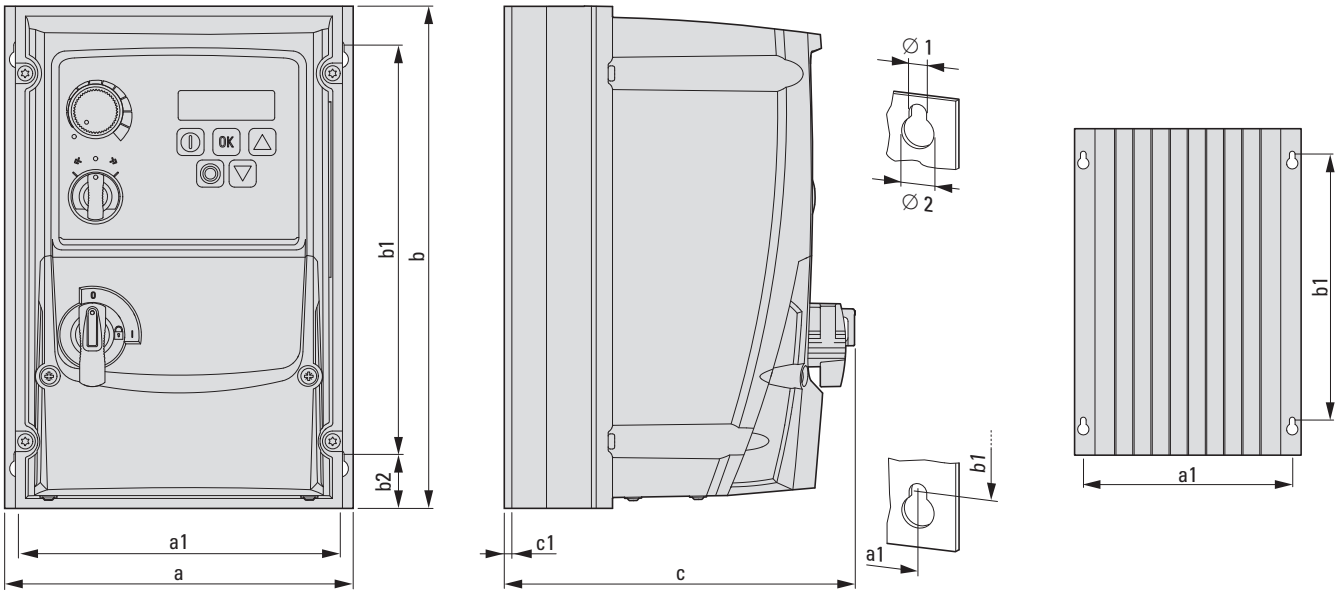

Figure 80: Dimensions for DC1 with IP66 degree of protection (NEMA 4X)

Table 57: Dimensions, weights, and sizes for IP66

Size	a mm (in)	a1 mm (in)	b mm (in)	b1 mm (in)	b2 mm (in)	c mm (in)	c1 mm (in)	Ø1 mm (in)	Ø2 mm (in)	m kg (lbs)
FS1	161 (6.34)	148.5 (5.85)	232 (9.13)	189 (7.44)	25 (0.98)	162 (6.38)	3.5 (0.14)	4 (0.15)	8 (0.31)	2.5 (5.51)
FS2	188 (7.4)	176 (6.93)	257 (10.12)	200 (7.87)	28 (1.1)	182 (7.17)	3.5 (0.14)	4.2 (0.16)	8.5 (0.33)	3.5 (7.72)
FS3	211 (8.31)	197.5 (7.78)	310 (12.2)	252 (9.92)	33 (1.3)	238 (9.37)	3.5 (0.14)	4.2 (0.16)	8.5 (0.33)	7 (15.43)
FS4	240 (9.45)	226 (8.9)	360 (14.17)	300 (11.81)	33 (1.3)	275 (10.83)	3.5 (0.14)	4.2 (0.16)	8.5 (0.33)	9.5 (20.94)

1 in = 1'' = 25.4 mm, 1 mm = 0.0394 in

6.4 Cable cross-sections

The "Maximum terminal capacity" specification indicates the maximum possible sizes that can be connected to the power terminals. The cross-sectional areas and gauges that should be used for the power supply and motor connections are recommendations for the corresponding frame sizes and ratings and are provided as examples.

→ Use the general installation instructions and local conditions as a basis when selecting terminal capacities.

Table 58: Cable cross-sections

Device Type	Size	Maximum terminal capacity		Input current I_{LN}	Cross-sectional area/ gauge that should be used for the power supply (L1/L, L2/N, L3, PE)		Output current (rated operational current) I_e	Cross-sectional area/ gauge that should be used for the motor connection (U, V, W, PE)	
		mm²	AWG/ kcmil 1)	A	mm²	AWG/ kcmil 1)	A	mm²	AWG/ kcmil 1)
Mains voltage 115 V Supply voltage (50/60 Hz) U_{LN} 110 (-10 %) - 115 (+10 %) V U_e 115 V AC, single-phase / U_2 230 V AC, three-phase (internal voltage doubler)									
DC1-1D2D3…	FS1	8	8	7.8	2.5	14	2.3	1.5	14
DC1-1D4D3…	FS1	8	8	15.8	4	10	4.3	1.5	14
DC1-1D5D8…	FS2	8	8	21.9	6	8	5.8	1.5	14
Mains voltage 230 V Supply voltage (50/60 Hz) U_{LN} 200 (-10 %) - 240 (+10 %) V U_e 230 V AC, single-phase / U_2 230 V AC, three-phase									
DC1-122D3…	FS1	8	8	3.7	1.5	14	2.3	1.5	14
DC1-124D3…	FS1	8	8	7.5	1.5	14	4.3	1.5	14
DC1-127D0NN…	FS1	8	8	12.9	2.5	12	7	1.5	14
DC1-127D0FN…	FS1	8	8	12.9	2.5	12	7	1.5	14
DC1-127D0NB…	FS2	8	8	12.9	2.5	12	7	1.5	14
DC1-127D0FB…	FS2	8	8	12.9	2.5	12	7	1.5	14
DC1-12011…	FS2	8	8	19.2	4	10	10.5	1.5	14
DC1-12015…	FS3	8	8	29.2	4	8	15.3	2.5	12

Device Type	Size	Maximum terminal capacity		Input current I_{LN}	Cross-sectional area/ gauge that should be used for the power supply (L1/L, L2/N, L3, PE)		Output current (rated operational current) I_e	Cross-sectional area/ gauge that should be used for the motor connection (U, V, W, PE)	
		mm²	AWG/ kcmil 1)	A	mm²	AWG/ kcmil 1)	A	mm²	AWG/ kcmil 1)
Mains voltage 230 V **Supply voltage (50/60 Hz) U_{LN} 200 (-10 %) - 240 (+10 %) V** **U_e 230 V AC, three-phase / U_2 230 V AC, three-phase**									
DC1-322D3…	FS1	8	8	3.4	1.5	14	2.3	1.5	14
DC1-324D3…	FS1	8	8	5.6	1.5	14	4.3	1.5	14
DC1-327D0NN…	FS1	8	8	9.5	1.5	14	7	1.5	14
DC1-327D0NB…	FS2	8	8	8.9	1.5	14	7	1.5	14
DC1-327D0FB…	FS2	8	8	8.9	1.5	14	7	1.5	14
DC1-32011…	FS2	8	8	12.1	2.5	12	10.5	1.5	14
DC1-32018…	FS3	8	8	20.9	6	10	18	2.5	10
DC1-32024…	FS3	8	8	26.4	10	8	24	4	10
DC1-32030…	FS4	16	5	33.3	16	8	30	6	8
DC1-32046…	FS4	16	5	50.1	16	6	46	10	6
Mains voltage 400 V **Supply voltage (50/60 Hz) U_{LN} 380 (-10 %) - 480 (+10 %) V** **U_e 400 V AC, three-phase / U_2 400 V AC, three-phase**									
DC1-342D2…	FS1	8	8	3.5	1.5	14	2.2	1.5	14
DC1-344D1NN…	FS1	8	8	5.6	1.5	14	4.1	1.5	14
DC1-344D1FN…	FS1	8	8	5.6	1.5	14	4.1	1.5	14
DC1-344D1NB…	FS2	8	8	5.6	1.5	14	4.1	1.5	14
DC1-344D1FB…	FS2	8	8	5.6	1.5	14	4.1	1.5	14
DC1-345D8…	FS2	8	8	7.5	1.5	14	5.8	1.5	14
DC1-349D5…	FS2	8	8	11.5	2.5	12	9.5	1.5	14
DC1-34014…	FS3	8	8	17.2	4	10	14	1.5	14
DC1-34018…	FS3	8	8	21.2	4	10	18	2.5	10
DC1-34024…	FS3	8	8	27.5	8	8	24	4	10
DC1-34030…	FS4	16	5	34.2	16	8	30	6	8
DC1-34039…	FS4	16	5	44.1	16	6	39	10	8
DC1-34046…	FS4	16	5	51.9	16	5	46	10	6

1) AWG = American wire gauge
kcmil = Thousands of circular mils (1 kcmil = 0.5067 mm²)

7 Accessories

7.1 Fuses

The Eaton circuit-breakers and fuses listed below are examples and can be used without additional measures. If you use other circuit-breakers and/or fuses, make sure to take their protection characteristic and operational voltage into account. When using other circuit-breakers, it may be necessary to also use fuses depending on the circuit-breaker's model, design, and settings. There may also be limitations concerning the short-circuit capacity and the supply network's characteristic, and these must also be taken into account when selecting circuit-breakers and/or fuses.

Table 59: Protective devices

	Symbol	Description
①	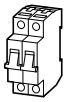	**Miniature circuit breakers** FAZ-B…/1N: 1 pole + N FAZ-B…/2: 2 pole FAZ-B…/3: 3 pole Rated operating voltage: 230/400 V AC Switching capacity: 15 kA
②	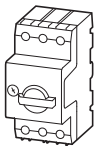	**Motor-Protective Circuit-Breakers** PKM0…, PKZM4…: 3 pole Rated operating voltage: 690 V AC Switching capacity: • PKM0: 150 kA to 12 A and 50 kA to 32 A • PKZM4: 50 kA
③		**Fuse** Rated operating voltage: 500 V AC Switching capacity: 50 kA Size: DII, E27 / DIII, E33 Fuse base: S27… / S33…
④		**Fuse Class J** Rated operating voltage: 600 V AC Switching capacity: 300 kA Fuse bases: • up to 30 A: J60030… • 35 - 60 A: J60060… • 70 - 100 A: JM60100…

Table 60: Specified fuses

Device Type	Input current	Fuse or miniature circuit-breaker					
	I_{LN}	IEC (Type B or gG)				UL (Class CC or J)[1]	
	A	A	Eaton type			A	Eaton type
Mains voltage 115 V **Supply voltage (50/60 Hz) U_{LN} 110 (-10 %) - 115 (+10 %) V** **U_e 115 V AC, single-phase / U_2 230 V AC, three-phase (internal voltage doubler)**							
			①	①, 2 phase	④		⑤
DC1-1D2D3…	7.8	10	FAZ-B10/1N	FAZ-B10/2	10D27	10	LPJ-10SP
DC1-1D4D3…	15.8	25	FAZ-B25/1N	FAZ-B25/2	25D27	20	LPJ-25SP
DC1-1D5D8…	21.9	32	FAZ-B32/1N	FAZ-B32/2	35D33	30	LPJ-30SP
Mains voltage 230 V **Supply voltage (50/60 Hz) U_{LN} 200 (-10 %) - 240 (+10 %) V** **U_e 230 V AC, single-phase / U_2 230 V AC, three-phase**							
			①	①, 2 phase	④		⑤
DC1-122D3…	3.7	10	FAZ-B10/1N	FAZ-B10/2	10D27	6	LPJ-6SP
DC1-124D3…	7.5	10	FAZ-B10/1N	FAZ-B10/2	10D27	10	LPJ-10SP
DC1-127D0NN…	12.9	16	FAZ-B16/1N	FAZ-B16/2	16D27	17.5	LPJ-17-1-2SP
DC1-127D0FN…	12.9	16	FAZ-B16/1N	FAZ-B16/2	16D27	17.5	LPJ-17-1-2SP
DC1-127D0NB…	12.9	16	FAZ-B16/1N	FAZ-B16/2	16D27	17.5	LPJ-17-1-2SP
DC1-127D0FB…	12.9	16	FAZ-B16/1N	FAZ-B16/2	16D27	17.5	LPJ-17-1-2SP
DC1-12011…	19.2	25	FAZ-B25/1N	FAZ-B25/2	25D27	25	LPJ-25SP
DC1-12015…	29.2	40	FAZ-B40/1N	FAZ-B40/2	40D33	40	LPJ-40SP
Mains voltage 230 V **Supply voltage (50/60 Hz) U_{LN} 200 (-10 %) - 240 (+10 %) V** **U_e 230 V AC, three-phase / U_2 230 V AC, three-phase**							
			①	②	③		④
DC1-322D3…	3.4	6	FAZ-B6/3	PKM0-6.3	6D27	6	LPJ-6SP
DC1-324D3…	5.6	10	FAZ-B10/3	PKM0-10	10D27	10	LPJ-10SP
DC1-327D0NN…	9.5	16	FAZ-B16/3	PKM0-16	16D27	15	LPJ-15SP
DC1-327D0NB…	8.9	16	FAZ-B16/3	PKM0-16	16D27	15	LPJ-15SP
DC1-327D0FB…	8.9	16	FAZ-B16/3	PKM0-16	16D27	15	LPJ-15SP
DC1-32011…	12.1	16	FAZ-B16/3	PKM0-16	16D27	17.5	LPJ-17-1-2SP
DC1-32018…	20.9	32	FAZ-B32/3	PKM0-32	35D33	30	LPJ-30SP
DC1-32024…	26.4	40	FAZ-B40/3	PKZM4-40	35D33	35	LPJ-35SP
DC1-32030…	33.3	40	FAZ-B40/3	PKZM4-40	50D33	45	LPJ-45SP
DC1-32046…	50.1	63	FAZ-B63/3	PKZM4-63	63D33	70	LPJ-70SP

1) Maximum supply short-circuit current: 100 kA rms (AC)

Device Type	Input current	Fuse or miniature circuit-breaker					
	I_{LN}	IEC (Type B or gG)				UL (Class CC or J)[1]	
	A	A	Eaton type			A	Eaton type
Mains voltage 400 V **Supply voltage (50/60 Hz) U_{LN} 380 (-10 %) - 480 (+10 %) V** **U_e 400 V AC, three-phase / U_2 400 V AC, three-phase**							
			①	②	③		④
DC1-342D2…	3.5	6	FAZ-B6/3	PKM0-6.3	6D27	6	LPJ-6SP
DC1-344D1NN…	5.6	10	FAZ-B10/3	PKM0-10	10D27	10	LPJ-10SP
DC1-344D1FN…	5.6	10	FAZ-B10/3	PKM0-10	10D27	10	LPJ-10SP
DC1-344D1NB…	5.6	10	FAZ-B10/3	PKM0-10	10D27	10	LPJ-10SP
DC1-344D1FB…	5.6	10	FAZ-B10/3	PKM0-10	10D27	10	LPJ-10SP
DC1-345D8…	7.5	16	FAZ-B16/3	PKM0-16	16D27	10	LPJ-10SP
DC1-349D5…	11.5	16	FAZ-B16/3	PKM0-16	16D27	15	LPJ-15SP
DC1-34014…	17.2	25	FAZ-B25/3	PKM0-25	25D33	25	LPJ-25SP
DC1-34018…	21.2	32	FAZ-B32/3	PKM0-32	35D33	30	LPJ-30SP
DC1-34024…	27.5	40	FAZ-B40/3	PKZM4-40	40D33	35	LPJ-35SP
DC1-34030…	34.2	40	FAZ-B40/3	PKZM4-40	40D33	45	LPJ-45SP
DC1-34039…	44.1	50	FAZ-B50/3	PKZM4-50	50D33	60	LPJ-45SP
DC1-34046…	51.9	63	FAZ-B63/3	PKZM4-63	63D33	70	LPJ-70SP

1) Maximum supply short-circuit current: 100 kA rms (AC)

7.2 Mains contactors

→ The mains contactors listed here are based on the variable frequency drive's rated input-side mains current I_{LN} without an external mains choke.
The contactor should be selected based on thermal current $I_{th} = I_e$ (AC-1) at the specified ambient air temperature.

> *NOTICE*
> The inching operation is not permissible via the mains contactor (Pause time ≧ 30 s between switching off and on).

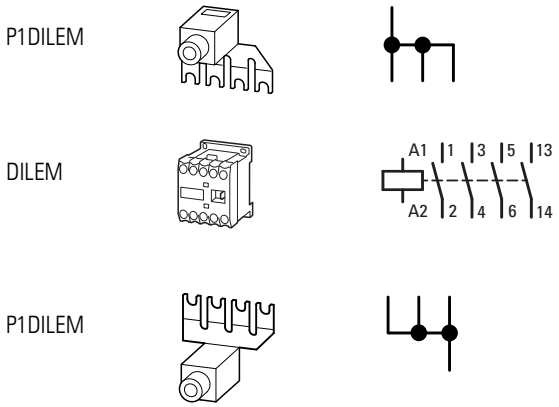

Figure 81: Mains contactor at single-phase connection (DC1-12…)

Table 61: Mains contactors

Device Type	Input current	Mains contactor (thermal current AC-1)			
	I_{LN}	Type (max. 50 °C and IEC)		Type (max. 40 °C and UL)	
	A		A		A
Mains voltage 115 V **Supply voltage (50/60 Hz) U_{LN} 110 (-10 %) - 115 (+10 %) V** **U_e 115 V AC, single-phase / U_2 230 V AC, three-phase (internal voltage doubler)**					
DC1-1D2D3…	7.8	DILEM-…+P1DILEM	50	DILEM-…+P1DILEM	50
DC1-1D4D3…	15.8	DILEM-…+P1DILEM	50	DILEM-…+P1DILEM	50
DC1-1D5D8…	21.9	DILEM-…+P1DILEM	50	DILEM-…+P1DILEM	50
Mains voltage 230 V **Supply voltage (50/60 Hz) U_{LN} 200 (-10 %) - 240 (+10 %) V** **U_e 230 V AC, single-phase / U_2 230 V AC, three-phase**					
DC1-122D3…	3.7	DILEM-…+P1DILEM	50	DILEM-…+P1DILEM	50
DC1-124D3…	7.5	DILEM-…+P1DILEM	50	DILEM-…+P1DILEM	50
DC1-127D0NN…	12.9	DILEM-…+P1DILEM	50	DILEM-…+P1DILEM	50
DC1-127D0FN…	12.9	DILEM-…+P1DILEM	50	DILEM-…+P1DILEM	50
DC1-127D0NB…	12.9	DILEM-…+P1DILEM	50	DILEM-…+P1DILEM	50
DC1-127D0FB…	12.9	DILEM-…+P1DILEM	50	DILEM-…+P1DILEM	50
DC1-12011…	19.2	DILEM-…+P1DILEM	50	DILEM-…+P1DILEM	50
DC1-12015…	29.2	DILEM-…+P1DILEM	50	DILEM-…+P1DILEM	50
Mains voltage 230 V **Supply voltage (50/60 Hz) U_{LN} 200 (-10 %) - 240 (+10 %) V** **U_e 230 V AC, three-phase / U_2 230 V AC, three-phase**					
DC1-322D3…	3.4	DILEM-…	20	DILEM-…	20
DC1-324D3…	5.6	DILEM-…	20	DILEM-…	20
DC1-327D0NN…	9.5	DILEM-…	20	DILEM-…	20
DC1-327D0NB…	8.9	DILEM-…	20	DILEM-…	20
DC1-327D0FB…	8.9	DILEM-…	20	DILEM-…	20
DC1-32011…	12.1	DILEM-…	20	DILEM-…	20
DC1-32018…	20.9	DILM7-…	21	DILM7-…	22
DC1-32024…	26.4	DILM17-…	38	DILM17-…	40
DC1-32030…	33.3	DILM17-…	38	DILM17-…	40
DC1-32046…	50.1	DILM40-…	57	DILM40-…	60

Device Type	Input current	Mains contactor (thermal current AC-1)			
	I_{LN}	Type (max. 50 °C and IEC)		Type (max. 40 °C and UL)	
	A		A		A
Mains voltage 400 V **Supply voltage (50/60 Hz) U_{LN} 380 (-10 %) - 480 (+10 %) V** **U_e 400 V AC, three-phase / U_2 400 V AC, three-phase**					
DC1-342D2…	3.5	DILEM-…	20	DILEM-…	20
DC1-344D1NN…	5.6	DILEM-…	20	DILEM-…	20
DC1-344D1FN…	5.6	DILEM-…	20	DILEM-…	20
DC1-344D1NB…	5.6	DILEM-…	20	DILEM-…	20
DC1-344D1FB…	5.6	DILEM-…	20	DILEM-…	20
DC1-345D8…	7.5	DILEM-…	20	DILEM-…	20
DC1-349D5…	11.5	DILEM-…	20	DILEM-…	20
DC1-34014…	17.2	DILEM-…	20	DILEM-…	20
DC1-34018…	21.2	DILM7-…	21	DILM7-…	22
DC1-34024…	27.5	DILM17-…	38	DILM17-…	40
DC1-34030…	34.2	DILM17-…	38	DILM17-…	40
DC1-34039…	44.1	DILM40-…	57	DILM25-…	45
DC1-34046…	51.9	DILM40-…	57	DILM40-…	60

7.3 Mains chokes

For more information and technical data on DX-LN… mains chokes, please refer to instruction leaflet IL00906003Z.

DX-LN1…

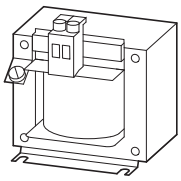

Figure 82: DEX-LN1… mains chokes (single-phase)

Table 62: Assigned mains chokes (single-phase)

Device Type	Input current	Mains choke, single-phase (U_{LN} max. 260 V +10 %, 50/60 Hz ±10 %)			
		Type (max. 50 °C)		Type (max. 40 °C)	
	I_{LN}		I_e		I_e
	A		A		A
Mains voltage 115 V **Supply voltage (50/60 Hz) U_{LN} 110 (-10 %) - 115 (+10 %) V** **U_e 115 V AC, single-phase / U_2 230 V AC, three-phase (internal voltage doubler)**					
DC1-1D2D3…	7.8	DX-LN1-009	8.1	DX-LN1-009	8.6
DC1-1D4D3…	15.8	DX-LN1-018	17.1	DX-LN1-018	18
DC1-1D5D8…	21.9	DX-LN1-024	22.8	DX-LN1-024	24
Mains voltage 230 V **Supply voltage (50/60 Hz) U_{LN} 200 (-10 %) - 240 (+10 %) V** **U_e 230 V AC, single-phase / U_2 230 V AC, three-phase**					
DC1-122D3…	3.7	DX-LN1-006	5.5	DX-LN1-006	5.8
DC1-124D3…	7.5	DX-LN1-009	8.1	DX-LN1-009	8.6
DC1-127D0…	12.9	DX-LN1-018	17.1	DX-LN1-013	13
DC1-12011…	19.2	DX-LN1-024	22.8	DX-LN1-024	24
DC1-12015…	29.2	DX-LN1-032	30.4	DX-LN1-032	32

DX-LN3…

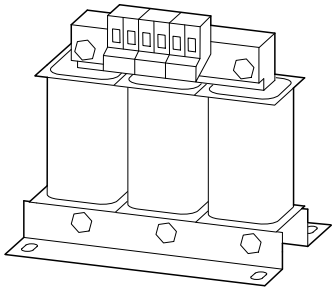

Figure 83: Mains chokes DEX-LN3… (three-phase)

Table 63: Assigned mains chokes (three-phase)

Device Type	Input current	Mains choke, three-phase (U_{LN} max. 500 V +10 %, 50/60 Hz ±10 %)			
		Type (max. 50 °C)		Type (max. 40 °C)	
	I_{LN}		I_e		I_e
	A		A		A
Mains voltage 230 V **Supply voltage (50/60 Hz) U_{LN} 200 (-10 %) - 240 (+10 %) V** **U_e 230 V AC, three-phase / U_2 230 V AC, three-phase**					
DC1-322D3…	3.4	DX-LN3-004	3.7	DX-LN3-004	3.9
DC1-324D3…	5.6	DX-LN3-006	5.7	DX-LN3-006	6
DC1-327D0…	9.5	DX-LN3-010	9.5	DX-LN3-010	10
DC1-32011…	12.1	DX-LN3-016	15.2	DX-LN3-016	16
DC1-32018…	20.9	DX-LN3-025	23.7	DX-LN3-025	25
DC1-32024…	26.4	DX-LN3-040	38	DX-LN3-040	40
DC1-32030…	33.3	DX-LN3-040	38	DX-LN3-040	40
DC1-32046…	50.1	DX-LN3-060	57	DX-LN3-050	50
Mains voltage 400 V **Supply voltage (50/60 Hz) U_{LN} 380 (-10 %) - 480 (+10 %) V** **U_e 400 V AC, three-phase / U_2 400 V AC, three-phase**					
DC1-342D2…	3.5	DX-LN3-004	3.7	DX-LN3-004	3.9
DC1-344D1…	5.6	DX-LN3-006	5.7	DX-LN3-006	6
DC1-345D8…	7.5	DX-LN3-010	9.5	DX-LN3-010	10
DC1-349D5…	11.5	DX-LN3-016	15.2	DX-LN3-016	16
DC1-34014…	17.2	DX-LN3-025	23.7	DX-LN3-025	25
DC1-34018…	21.2	DX-LN3-025	23.7	DX-LN3-025	25
DC1-34024…	27.5	DX-LN3-040	38	DX-LN3-040	40
DC1-34030…	34.2	DX-LN3-040	38	DX-LN3-040	40
DC1-34039…	44.1	DX-LN3-050	47.5	DX-LN3-050	50
DC1-34046…	51.9	DX-LN3-060	57	DX-LN3-060	60

7.4 Radio interference suppression filter

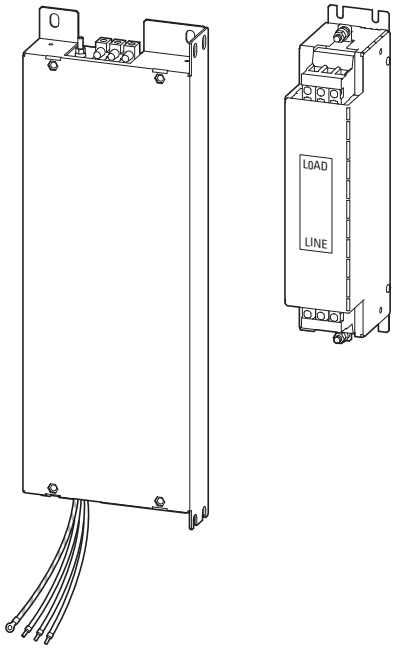

Figure 84: DX-EMC…-FS… (base-mounted filters with prefabricated connection cables) and DX-EMC… (side-mounting filters) external radio interference suppression filters

DX-EMC… external radio interference suppression filters should always be installed in the immediate proximity of the corresponding variable frequency drive. The connection cables between the radio interference suppression filter and the variable frequency drive should not be longer than 300 to 500 mm if they are installed without screening.

→ The DX-EMC… radio interference suppression filters with an IP20 degree of protection listed below are intended for installation in a control panel.
Please enquire for higher degrees of protection.

→ DX-EMC…-**FS**: Base-mounted filter for the specified frame size
DX-EMC…-**L**: Low leakage current

→ For more information and technical data on DX-EMC… radio interference suppression filters, please refer to the instruction leaflets IL04012017Z and IL04012018Z.

→ The maximum motor cable lengths for the C1, C2, and C3 interference categories listed below are standardized recommended values. They apply to the adjustable switching frequencies (f_{PWM}) of 4 to 24/32 kHz (parameter P-17) in the corresponding ratings.

Table 64: Assigned radio interference suppression filter (single-phase)

Device Type	Size	Input current	Radio interference suppression filter, single-phase Max. mains voltage U_{LN}: 250 V +0%, 50/60 Hz ±10% Max. ambient temperature: 50 °C	
			Part no.	rated operational current
		I_{LN} A		I_e A
Mains voltage 115 V **Supply voltage (50/60 Hz) U_{LN} 110 (-10 %) - 115 (+10 %) V** **U_e 115 V AC, single-phase / U_2 230 V AC, three-phase (internal voltage doubler)**				
DC1-1D2D3NN-A20CE1	FS1	7.8	DX-EMC12-014-FS1	14
DC1-1D4D3NN-A20CE1	FS1	15.8	DX-EMC12-019-FS1	19
DC1-1D5D8NB-A20CE1	FS2	21.9	DX-EMC12-025-FS2	25
Mains voltage 230 V **Supply voltage (50/60 Hz) U_{LN} 200 (-10 %) - 240 (+10 %) V** **U_e 230 V AC, single-phase / U_2 230 V AC, three-phase**				
DC1-122D3NN-A20CE1	FS1	3.7	DX-EMC12-014-FS1	14
DC1-124D3NN-A20CE1	FS1	7.5	DX-EMC12-014-FS1	14
DC1-127D0NN-A20CE1	FS1	12.9	DX-EMC12-014-FS1	14
DC1-127D0NB-A20CE1	FS2	12.9	DX-EMC12-014-FS2	14
DC1-12011NB-A20CE1	FS2	19.2	DX-EMC12-025-FS2	25
DC1-12015NB-A20CE1	FS3	29.2	DX-EMC12-031-FS3	31

Table 65: Assigned radio interference suppression filter (three-phase)

Device Type	Size	Input current	Radio interference suppression filter, three-phase Max. mains voltage U_{LN}: 520 V +0%, 50/60 Hz ±10% Max. ambient temperature: 50 °C	
			Part no.	rated operational current
		I_{LN} A		I_e A
Mains voltage 230 V **Supply voltage (50/60 Hz) U_{LN} 200 (-10 %) - 240 (+10 %) V** **U_e 230 V AC, three-phase / U_2 230 V AC, three-phase**				
DC1-322D3NN-A20CE1	FS1	3.4	DX-EMC34-008-FS1	8
			DX-EMC34-008-FS1-L	8
			DX-EMC34-008	8
			DX-EMC34-008-L	8
DC1-324D3NN-A20CE1	FS1	5.6	DX-EMC34-008-FS1	8
			DX-EMC34-008-FS1-L	8
			DX-EMC34-008	8
			DX-EMC34-008-L	8
DC1-327D0NN-A20CE1	FS1	9.5	DX-EMC34-016	16
			DX-EMC34-016-L	16
DC1-327D0NB-A20CE1	FS2	8.9	DX-EMC34-011-FS2	11
			DX-EMC34-011-FS2-L	11
			DX-EMC34-016	16
			DX-EMC34-016-L	16
DC1-32011NB-A20CE1	FS2	12.1	DX-EMC34-016	16
			DX-EMC34-016-L	16
DC1-32018NB-A20CE1	FS3	20.9	DX-EMC34-025-FS3	25
			DX-EMC34-025-FS3-L	25
			DX-EMC34-030	30
			DX-EMC34-030-L	30
DC1-32024NB-A20CE1	FS3	26.4	DX-EMC34-030	30
			DX-EMC34-030-L	30
DC1-32030NB-A20CE1	FS4	33.3	DX-EMC34-042	42
			DX-EMC34-042-L	42
DC1-32046NB-A20CE1	FS4	50.1	DX-EMC34-055	55
			DX-EMC34-055-L	55

Device Type	Size	Input current	Radio interference suppression filter, three-phase Max. mains voltage U_{LN}: 520 V +0%, 50/60 Hz ±10% Max. ambient temperature: 50 °C	
			Part no.	rated operational current
		I_{LN} A		I_e A
Mains voltage 400 V **Supply voltage (50/60 Hz) U_{LN} 380 (-10 %) - 480 (+10 %) V** **U_e 400 V AC, three-phase / U_2 400 V AC, three-phase**				
DC1-342D2NN-A20CE1	FS1	3.5	DX-EMC34-008-FS1	8
			DX-EMC34-008-FS1-L	8
			DX-EMC34-008	8
			DX-EMC34-008-L	8
DC1-344D1NN-A20CE1	FS1	5.6	DX-EMC34-008-FS1	8
			DX-EMC34-008-FS1-L	8
			DX-EMC34-008	8
			DX-EMC34-008-L	8
DC1-344D1NB-A20CE1	FS2	5.6	DX-EMC34-011-FS2	11
			DX-EMC34-011-FS2-L	11
			DX-EMC34-008	8
			DX-EMC34-008-L	8
DC1-345D8NB-A20CE1	FS2	7.5	DX-EMC34-011-FS2	11
			DX-EMC34-011-FS2-L	11
			DX-EMC34-008	8
			DX-EMC34-008-L	8
DC1-349D5NB-A20CE1	FS2	11.5	DX-EMC34-016	16
			DX-EMC34-016-L	16
DC1-34014NB-A20CE1	FS3	17.2	DX-EMC34-030	30
			DX-EMC34-030-L	30
DC1-34018NB-A20CE1	FS3	21.2	DX-EMC34-030	30
			DX-EMC34-030-L	30
DC1-34024NB-A20CE1	FS3	27.5	DX-EMC34-030	30
			DX-EMC34-030-L	30
DC1-34030NB-A20CE1	FS4	34.2	DX-EMC34-042	42
			DX-EMC34-042-L	42
DC1-34039NB-A20CE1	FS4	44.1	DX-EMC34-055	55
			DX-EMC34-055-L	55
DC1-34046NB-A20CE1	FS4	51.9	DX-EMC34-055	55
			DX-EMC34-055-L	55

7.5 Braking resistances

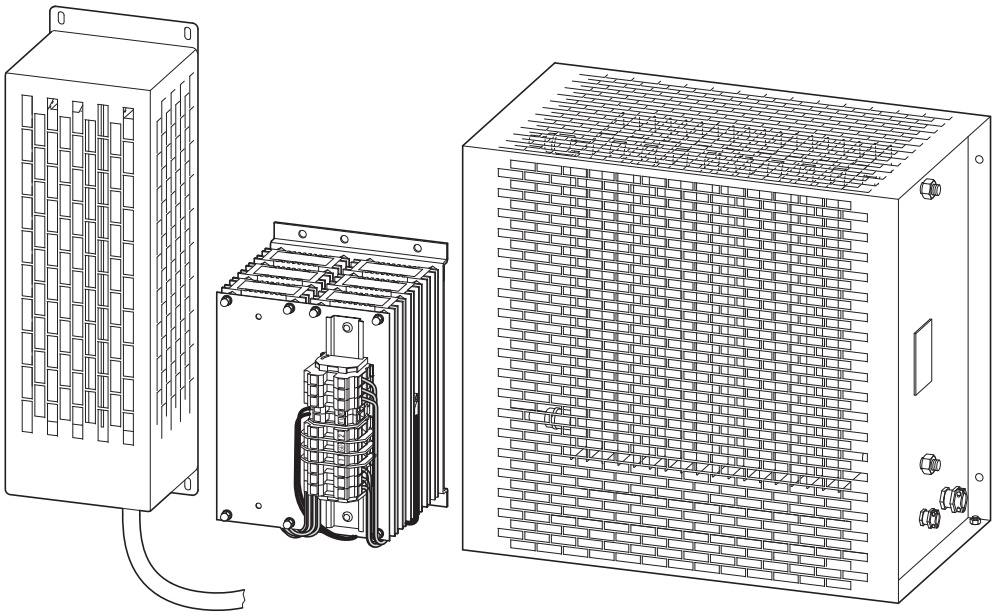

Figure 85: Examples of DX-BR… brake resistor designs

NOTICE

The specified minimum resistance R_{Bmin} must not be fallen below.

CAUTION

Brake resistors get extremely hot during operation!

The following tables provide examples of DX-BR… brake resistors rated for individual DC1 variable frequency drives. They are specified based on the "high duty" and "low duty" classification for intermittent braking with a cycle time t_C of 120 seconds and a pulse power P_{Peak} equal to maximum braking power P_{max} of the variable frequency drive with the rated motor output.

Load groups (simplified classification)

- **Low duty**: Low load with short braking duration and low duty factor (up to about 25 %), e.g., for horizontal conveyors and handling equipment for bulk cargo and general cargo, end carriages, sliding doors, and turbomachinery (centrifugal pumps, fans).
- **High duty**: High load with long braking duration and high duty factor (at least 30 %), e.g., for elevators, downhill conveyors, winders, centrifuges, flywheel motors, and large fans.

All brake resistors feature a temperature switch for protection against thermal overload.

This potential-free contact (N/C) can be directly integrated into the DC1 variable frequency drive's control section and work as an external fault message (control terminal 4, DI3, parameter P-15 = 3, 6, 7 or 13).

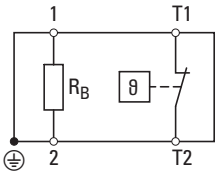

Exception:

The DX-BR3-100 resistor does not feature a circuit-breaker. It is inserted into the corresponding slots on the DC1 variable frequency drive's heat sinks (frame sizes FS2 and FS3) and is automatically protected against thermal overloads as a result (heat sink overtemperature, display: 0- t).

For more information and technical data on the DX-BR… brake resistors listed here, please refer to the corresponding instruction leaflet for the individual designs: IL04012024Z, IL04011ZU, IL04014ZU, IL04015ZU, IL04021ZU and IL040059ZU.

Table 66: Braking resistance – DC1 voltage class 230 V

Device Type	Size	Resistance value			Braking resistance (Low duty)					Braking resistance (High duty)				
					Part no.					Part no.				
		R_{Bmin} Ω	R_{Brec} Ω	P_{max} kW		R_{Brec} Ω	P_{max} kW	DF %	t_{Brems} s		R_{Brec} Ω	P_{max} kW	DF %	t_{Brems} s
Mains voltage 115 V **Supply voltage (50/60 Hz) U_{LN} 110 (-10 %) - 115 (+10 %) V** **U_e 115 V AC, single-phase / U_2 230 V AC, three-phase (internal voltage doubler)**														
DC1-1D5D8NB-A20CE1	FS2	100	100	1.1	DX-BR3-100	100	0.2	18	22	DX-BR100-0K4	100	0.4	36	44
Mains voltage 230 V **Supply voltage (50/60 Hz) U_{LN} 200 (-10 %) - 240 (+10 %) V** **U_e 230 V AC, single-phase / U_2 230 V AC, three-phase**														
DC1-127D0NB-A20CE1	FS2	100	100	1.5	DX-BR3-100	100	0.2	13	16	DX-BR100-600	100	0.6	40	48
DC1-127D0FB-A20CE1														
DC1-12011NB-A20CE1	FS2	50	50	2.2	DX-BR3-100	100	0.2	9	11	DX-BR050-720	50	0.72	33	39
DC1-12011FB-A20CE1														
DC1-12015NB-A20CE1	FS3	22	25	4	DX-BR024-720	24	0.72	18	22	DX-BR025-1440	25	1.44	36	43
Mains voltage 230 V **Supply voltage (50/60 Hz) U_{LN} 200 (-10 %) - 240 (+10 %) V** **U_e 230 V AC, three-phase / U_2 230 V AC, three-phase**														
DC1-327D0NB-A20CE1	FS2	100	100	1.5	DX-BR3-100	100	0.2	13	16	DX-BR100-600	100	0.6	40	48
DC1-327D0FB-A20CE1														
DC1-32011NB-A20CE1	FS2	50	50	2.2	DX-BR3-100	100	0.2	9	11	DX-BR050-720	50	0.72	33	39
DC1-32011FB-A20CE1														
DC1-32018NB-A20CE1	FS3	24	25	4	DX-BR024-720	24	0.72	18	22	DX-BR025-1440	25	1.44	36	43
DC1-32018FB-A20CE1														
DC1-32024NB-A20CE1	FS3	20	20	5.5	DX-BR020-960	20	0.96	17	21	DX-BR025-1920	25	1.92	35	42
DC1-32024FB-A20CE1														
DC1-32030NB-A20CE1	FS4	15	15	7.5	DX-BR020-960	20	0.96	13	15	DX-BR027-2880	27	2.88	38	46
DC1-32030FB-A20CE1														
DC1-32046NB-A20CE1	FS4	10	10	11	DX-BR020-960	20	0.96	9	10	DX-BR012-5K1	12	5.1	46	56
DC1-32046FB-A20CE1														

Device Type	Size	Resistance value			Braking resistance (Low duty)					Braking resistance (High duty)				
					Part no.					Part no.				
		R_{Bmin} Ω	R_{Brec} Ω	P_{max} kW		R_{Brec} Ω	P_{max} kW	DF %	t_{Brems} s		R_{Brec} Ω	P_{max} kW	DF %	t_{Brems} s
Mains voltage 400 V **Supply voltage (50/60 Hz) U_{LN} 380 (-10 %) - 480 (+10 %) V** **U_e 400 V AC, three-phase / U_2 400 V AC, three-phase**														
DC1-344D1NB-A20CE1	FS2	210	250	1.5	DX-BR210-200	210	0.2	13	16	DX-BR216-600	216	0.6	40	48
DC1-344D1FB-A20CE1														
DC1-345D8NB-A20CE1	FS2	200	200	2.2	DX-BR200-0K4	200	0.4	18	22	DX-BR200-0K8	200	0.8	36	44
DC1-345D8FB-A20CE1														
DC1-349D5NB-A20CE1	FS2	120	120	4	DX-BR150-0K5	150	0.5	13	15	2& DX-BR075-1K1	150	2.2	55	66
DC1-349D5FB-A20CE1														
DC1-34014NB-A20CE1	FS3	100	100	5.5	DX-BR100-0K8	100	0.8	15	17	2& DX-BR075-1K1	150	2.2	40	48
DC1-34014FB-A20CE1														
DC1-34018NB-A20CE1	FS3	80	80	7.5	DX-BR100-960	100	0.96	13	15	3& DX-BR035-1K1	105	3.3	44	53
DC1-34018FB-A20CE1														
DC1-34024NB-A20CE1	FS3	50	50	11	DX-BR050-1440	50	1.44	13	16	DX-BR050-5K1	50	5.1	46	56
DC1-34024FB-A20CE1														
DC1-34030NB-A20CE1	FS4	30	30	15.3	DX-BR050-1920	50	1.92	13	15	DX-BR047-9K2	47	9.2	61	74
DC1-34030FB-A20CE1														
DC1-34039NB-A20CE1	FS4	22	22	18.5	DX-BR025-1920	25	1.92	10	12	DX-BR022-9K2	22	9.2	50	60
DC1-34039FB-A20CE1														
DC1-34046NB-A20CE1	FS4	22	22	22	DX-BR025-1920	25	1.92	9	10	DX-BR022-9K2	22	9.2	42	50
DC1-34046FB-A20CE1														

Resistance values:

R_{Bmin} = Minimum permissible resistance;

R_{Brec} = Recommended resistance

P_{max} = Rated power for low-duty and high-duty classifications

2& DX-BR… = 2 units of this model connected in series; 3& DX-BR… = 3 units of this model connected in series;

7.6 Motor chokes

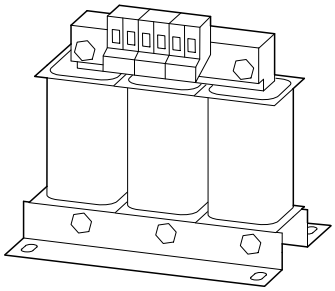

Figure 86: Motor choke DX-LM3…

Table 67: Motor chokes that should be used

Device Type	Rated operational current	Motor choke (three-phase) that should be used Max. U_{LN}: 750 VAC +0%; max. f_2: 400 Hz Maximum f_{PWM} switching frequency: 12 kHz (rms)[1)] Maximum ambient air temperature: 70 °C			
		Type (max. 50 °C)		Type (max. 40 °C)	
	I_e A		I_e A		I_e A
DC1-1D2D3…	2.3	DX-LM3-008	7.6	DX-LM3-008	8
DC1-1D4D3…	4.3	DX-LM3-008	7.6	DX-LM3-008	8
DC1-1D5D8…	5.8	DX-LM3-008	7.6	DX-LM3-008	8
DC1-122D3…	2.3	DX-LM3-008	7.6	DX-LM3-008	8
DC1-124D3…	4.3	DX-LM3-008	7.6	DX-LM3-008	8
DC1-127D0…	7	DX-LM3-008	7.6	DX-LM3-008	8
DC1-12011…	10.5	DX-LM3-016	15.2	DX-LM3-011	11
DC1-12015…	15.3	DX-LM3-016	15.2	DX-LM3-016	16
DC1-322D3…	2.3	DX-LM3-008	7.6	DX-LM3-008	8
DC1-324D3…	4.3	DX-LM3-008	7.6	DX-LM3-008	8
DC1-327D0…	7	DX-LM3-008	7.6	DX-LM3-008	8
DC1-32011…	10.5	DX-LM3-016	15.2	DX-LM3-011	11
DC1-32018…	18	DX-LM3-035	33.3	DX-LM3-035	35
DC1-32024…	24	DX-LM3-035	33.3	DX-LM3-035	35
DC1-32030…	30	DX-LM3-035	33.3	DX-LM3-035	35
DC1-32046…	46	DX-LM3-050	47.5	DX-LM3-050	50

1) f_{PWM} switching frequency ≤ 12 kHz (rms) → DC1 variable frequency drive setting: ≤ 24 kHz in parameter P-17 (double modulation)

Device Type	Rated operational current	Motor choke (three-phase) that should be used Max. U_{LN}: 750 VAC +0%; max. f_2: 400 Hz Maximum f_{PWM} switching frequency: 12 kHz (rms)[1)] Maximum ambient air temperature: 70 °C			
		Type (max. 50 °C)		Type (max. 40 °C)	
	I_e A		I_e A		I_e A
DC1-342D2…	2.2	DX-LM3-008	7.6	DX-LM3-008	8
DC1-344D1…	4.1	DX-LM3-008	7.6	DX-LM3-008	8
DC1-345D8…	5.8	DX-LM3-008	7.6	DX-LM3-008	8
DC1-349D5…	9.5	DX-LM3-011	10.5	DX-LM3-011	11
DC1-34014…	14	DX-LM3-016	15.2	DX-LM3-016	16
DC1-34018…	18	DX-LM3-035	33.3	DX-LM3-035	35
DC1-34024…	24	DX-LM3-035	33.3	DX-LM3-035	35
DC1-34030…	30	DX-LM3-035	33.3	DX-LM3-035	35
DC1-34039…	39	DX-LM3-050	47.5	DX-LM3-050	50
DC1-34046…	46	DX-LM3-050	47.5	DX-LM3-050	50

1) f_{PWM} switching frequency ≤ 12 kHz (rms) → DC1 variable frequency drive setting: ≤ 24 kHz in parameter P-17 (double modulation)

For more information and technical data on DX-LM3… motor chokes, please refer to instruction leaflet IL00906003Z.

7.7 Sine filter

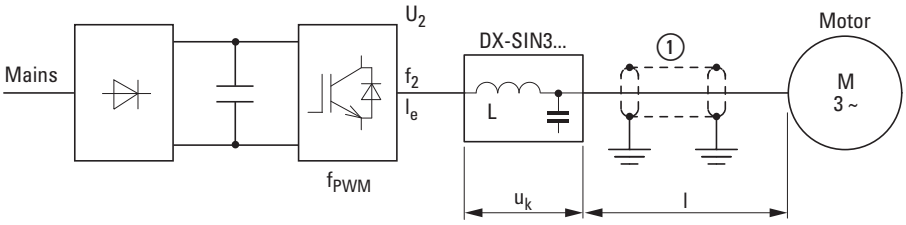

figure 87: Maximum permissible motor cable lengths

1 **Screened motor cable:** $U_2 \leqq 230$ V → l ≦ 200 m; $U_2 \leqq 500$ V → l ≦ 150 m
Unscreened motor cable: $U_2 \leqq 230$ V → l ≦ 300 m; $U_2 \leqq 500$ V → l ≦ 200 m

Table 68: Settings for parameter P-17

P-17	Set value	Description
0	4 kHz	Impermissible value when using DX-SIN3… sine filter
1	8 kHz	Default setting – Set value (no derating) Effective switching frequency: 4 kHz
2	12 kHz	Effective switching frequency: 6 kHz
3	16 kHz	Effective switching frequency: 8 kHz
4	24 kHz	Effective switching frequency: 12 kHz
5	32 kHz	Effective switching frequency: 16 kHz **Note:** Cannot be set on the following devices: • DC1-12… (FS3) • DC1-32… (FS3, FS4) • DC1-34… (FS3, FS4)

Table 69: Assigned sine filters

Device Type	Rated operational current	Sine filter (three-phase) that should be used Max. U_{LN}: 520 VAC +0%, max. f_2: 150 Hz Maximum carrier frequency f_{PWM}: 4 - 8 kHz (rms) 1) Maximum ambient temperature: 50 °C			
		Type (max. 50 °C)		Type (max. 40 °C)	
	I_e A		I_e A		I_e A
DC1-1D2D3…	2.3	DX-SIN3-004	3.8	DX-SIN3-004	4
DC1-1D4D3…	4.3	DX-SIN3-010	9.5	DX-SIN3-010	10
DC1-1D5D8…	5.8	DX-SIN3-010	9.5	DX-SIN3-010	10
DC1-122D3…	2.3	DX-SIN3-004	3.8	DX-SIN3-004	4
DC1-124D3…	4.3	DX-SIN3-010	9.5	DX-SIN3-010	10
DC1-127D0…	7	DX-SIN3-010	9.5	DX-SIN3-010	10
DC1-12011…	11	DX-SIN3-016	15.2	DX-SIN3-016	16
DC1-12015…	15.3	DX-SIN3-016	15.2	DX-SIN3-016	16
DC1-322D3…	2.3	DX-SIN3-004	3.8	DX-SIN3-004	4
DC1-324D3…	4.3	DX-SIN3-010	9.5	DX-SIN3-010	10
DC1-327D0…	7	DX-SIN3-010	9.5	DX-SIN3-010	10
DC1-32011…	11	DX-SIN3-016	15.2	DX-SIN3-016	16
DC1-32018…	18	DX-SIN3-023	21.9	DX-SIN3-023	23
DC1-32024…	24	DX-SIN3-032	30.4	DX-SIN3-032	32
DC1-32030…	30	DX-SIN3-032	30.4	DX-SIN3-032	32
DC1-32046…	46	DX-SIN3-061	58	DX-SIN3-048	48
DC1-342D2…	2.2	DX-SIN3-004	3.8	DX-SIN3-004	4
DC1-344D1…	4.1	DX-SIN3-010	9.5	DX-SIN3-010	10
DC1-345D8…	5.8	DX-SIN3-010	9.5	DX-SIN3-010	10
DC1-349D5…	9.5	DX-SIN3-010	9.5	DX-SIN3-010	10
DC1-34014…	14	DX-SIN3-016	15.2	DX-SIN3-016	16
DC1-34018…	18	DX-SIN3-023	21.9	DX-SIN3-023	23
DC1-34024…	24	DX-SIN3-032	30.4	DX-SIN3-032	32
DC1-34030…	30	DX-SIN3-032	30.4	DX-SIN3-032	32
DC1-34039…	39	DX-SIN3-048	45.6	DX-SIN3-048	48
DC1-34046…	46	DX-SIN3-061	58	DX-SIN3-048	48

1) Required setting for parameter P-17: 8 kHz (double modulation).
This corresponds to an rms value of 4 kHz.

→ For more information and technical data on DX-SIN3… sine filters, please refer to instruction leaflet IL00906001Z.

7.8 All-pole sine filter

All-pole sine filters make it possible to reduce differential-mode and common-mode interference at the variable frequency drive output when using extremely long motor cable lengths. This makes it possible to eliminate the bearing currents, caused by common-mode voltage, between the motor windings' neutral point and earth potential, extending the motor's lifespan.

DX-SIN3-…-A all-pole sine filters also require being connected to DC+ (or +) and DC- (or -) on the internal DC link in DC1 variable frequency drives.

→ Not possible with DC1 in FS1

They can be used

- For fixed switching frequency = 8 kHz,
- Output voltage U_{2max} to 500 V,
- Rotating field frequency (f_2) of 5 to 150 Hz.

They make it possible to forego the use of screened motor cables.

→ DX-SIN3-…-A all-pole sine filters may be operated only with fixed switching frequencies.
Accordingly, the switching frequency (P-17) must be set to 1:8 kHz. Other switching Frequencies are not possible when using all-pole sine filters.
For the DC1 variable frequency drive, the set value with the double-modulation procedure is the double value of the effective value in the sine filter (1 ≙ 8 kHz → 4 kHz).

Table 70: Rated all-pole sine filters (IP20 protection)

Device type	**Rated sine filter[1], rated frequency f_2 = 5 - 150 Hz**		
DA1-34…	**Type**	**Rated operational current** **A**	**Voltage drop u_K at 400 V** **%**
DC1-344D1…	DX-SIN3-006-A	6.5	6.5
DC1-345D8…	DX-SIN3-006-A	6.5	6.5
DC1-349D5…	DX-SIN3-013-A	13	6.5
DC1-34014…	DX-SIN3-024-A	24	6.5
DC1-34018…	DX-SIN3-024-A	24	6.5
DC1-34024…	DX-SIN3-024-A	24	6.5
DC1-34030…	DX-SIN3-046-A	46	6.5
DC1-34039…	DX-SIN3-046-A	46	6.5
DC1-34046…	DX-SIN3-046-A	46	6.5

7.9 Device-specific accessories

DCX… device-specific accessories are connected directly to the plug-in control signal terminals on DC1 variable frequency drives, making it easy to expand the drives' functionality.

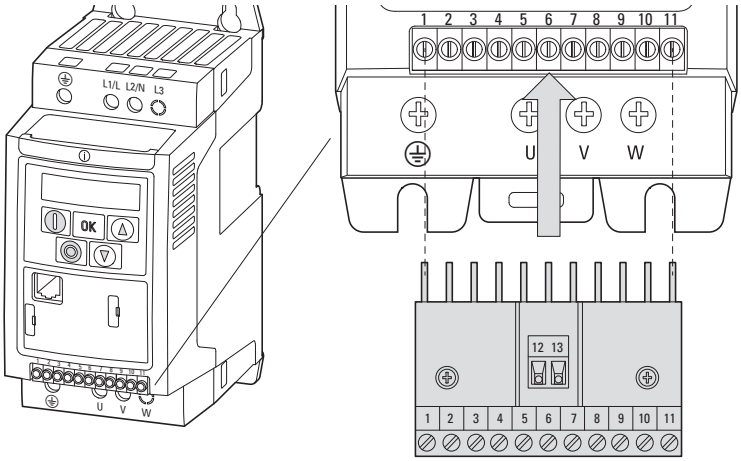

Figure 88: Connecting DXC… to the control signal terminals on the DC1 variable frequency drive

→ The control terminals on the DC1 variable frequency drive are plug-in terminals. They can be screwed onto the expansion module in order to cover the pins (protection against contact).

7.9.1 DXC-EXT-IO… coupling module

Coupling modules DXC-EXT-IO110 and DXC-EXT-IO230 can be used to integrate the digital inputs on DC1 variable frequency drives directly into circuits with 110 VAC / 230 VAC. In the actual coupling mode, the inputs (connection terminals 1 to 4 and 12 and 13) are galvanically isolated from the variable frequency drive's digital inputs (DI1 to DI4).

→ For more information on the coupling modules and on output expansions, please refer to Application Note AP040032 (DC1, I/O Configuration).

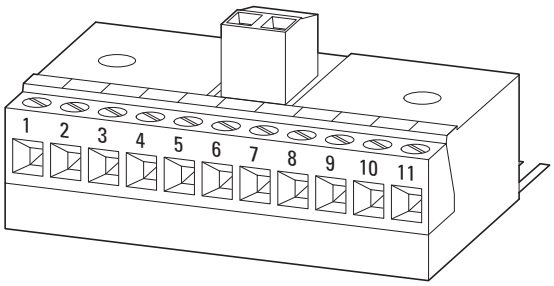

Figure 89: DXC-EXT-IO110 and DXC-EXT-IO230

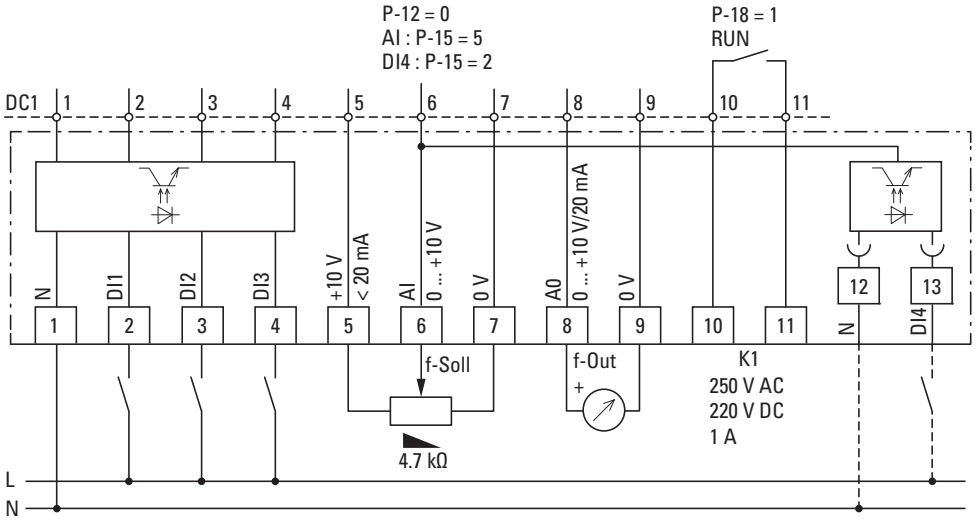

Figure 90: Block diagram DXC-EXT-IO110 and DXC-EXT-IO230

Parameters:

P-12 = 0 Terminal mode (DS)

P-15 = 5 WE = The analog value on terminal 6 will be used as the frequency reference value (AI)

P-15 = 2 Terminal 12 and 13 digital input active (DI4)

P-18 = 0 RUN (DS)

Table 71: Specific technical data DXC-EXT-IO…

Technical data	Unit	Value
Input voltage		
DXC-EXT-IO110	V	100 - 10 % - 120 + 10 %, 50/60 Hz (90 - 132 ± 0 %, 48 - 62 Hz ± 0 Hz)
DXC-EXT-IO230	V	200 - 10 % - 240 + 10 %, 50/60 Hz (180 - 264 ± 0 %, 48 - 62 Hz ± 0 Hz)
High signal		
DXC-EXT-IO110	V	80 - 250 , $R_i \approx 68$ kΩ
DXC-EXT-IO230	V	80 - 250 , $R_i \approx 68$ kΩ
Degree of protection (without the connection pins being covered by the DC1's control signal terminal block)		IP00

→ For detailed instructions on how to install the expansion modules, please refer to instruction leaflet IL04012016Z.

NOTICE

Internal relay K1 is looped with the expansion module, meaning it can only conduct a lower current (≦ 1 A).

DANGER

Dangerous voltage!

Expansion modules DXC-EXT-IO110 and DXC-EXT-IO230 must not be placed into operation until all mounting and installation work has been completed. Any other use will be considered to be an inappropriate use.

7.9.2 DXC-EXT-2RO output expansion

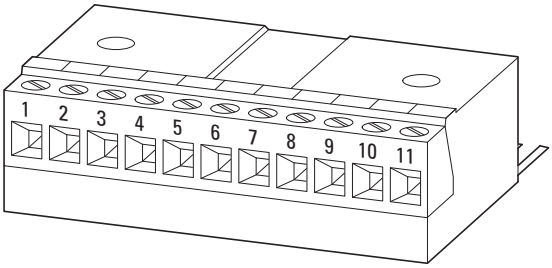

Figure 91: DXC-EXT-2RO

Expansion module DXC-EXT-2RO can be used to convert digital output DO1 (control signal terminals 8 and 9) on DC1 variable frequency drives to a potential-free contact relay output K2 (N/O). When this option is used, the variable frequency drive will have two potential-free relay outputs available and will be able to switch voltages of up to 250 VAC and 220 VDC.

Table 72: Specific technical data DX-EXT-2RO

Technical data	Unit	Value
Relay switching voltage		
K1 (control signal terminals 10, 11)	V	250 AC / 230 DC
K2 (control signal terminals 8, 9)	V	250 AC / 220 DC
Relay switching current		
K1 (control signal terminals 10, 11)	A	≦ 1
K2 (control signal terminals 8, 9)	A	≦ 1
Operating Temperature	°C	-10 - +50
Degree of protection (without the connection pins being covered by the DC1's control signal terminal block)		IP00

For detailed instructions on how to install the module, please refer to instruction leaflet IL04012015Z.

NOTICE

Internal relay K1 is looped with the expansion module, meaning it can only conduct a lower current (≦ 1 A).

DANGER

Dangerous voltage!

Expansion module DXC-EXT-2RO1AO must not be placed into operation until all mounting and installation work has been completed. Any other use will be considered to be an inappropriate use.

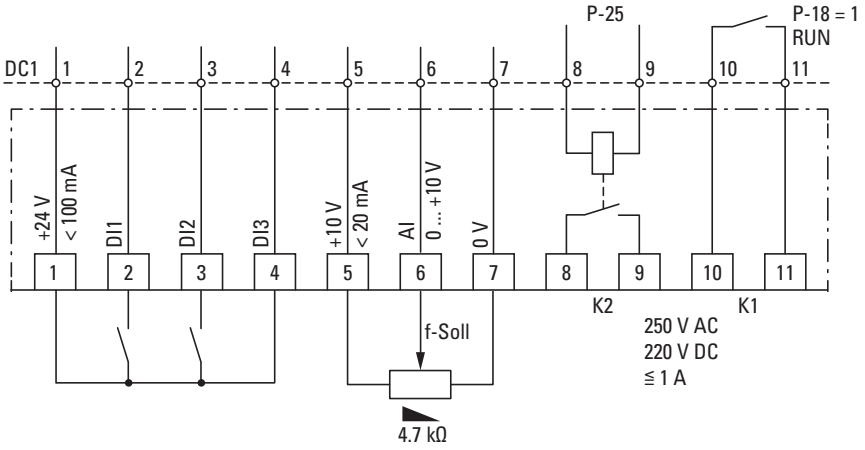

Figure 92: Block diagram DXC-EXT-2RO

Parameter Definition

The K1 relay output's function can be configured using parameter P-18 (default setting = 1: RUN). Meanwhile, the new K2 relay output's function can be configured using parameter P-25 (default setting = Analog output AO1).

Parameter P-25 must be set to a value between 0 and 7 in order for the output to function as a digital output.
If the parameter is set to a value greater than 7, relay output K2 will not work properly.

7.9.3 DXC-EXT-2RO1AO output expansion

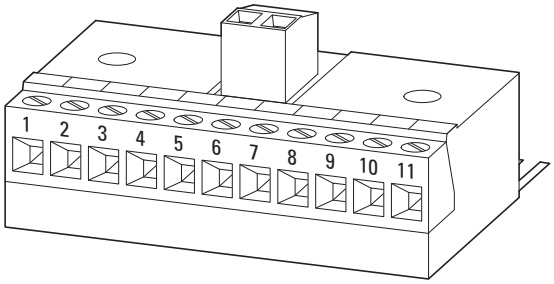

Figure 93: DXC-EXT-2RO1AO

Expansion module DXC-EXT-2RO1AO was developed with HVAC applications in mind. It can switch the "Drive running" and "Shutdown due to fault" messages with two separate relays (K1, K2).

Table 73: Specific technical data DXC-EXT-2RO1AO

Technical data	Unit	Value
Output switching voltage		
K1 (control signal terminals 12, 13)	V	250 AC / 230 DC
K2 (control signal terminals 10, 11)	V	250 AC / 220 DC
AO	V	0 - 10 DC
Relay switching current		
K1 (control signal terminals 12, 13)	A	≦ 1
K2 (control signal terminals 10, 11)	A	≦ 1
AO	mA	< 20
Operating Temperature	°C	-10 - +50
Degree of protection (without the connection pins being covered by the DC1's control signal terminal block)		IP00

→ For detailed instructions on how to install the module, please refer to instruction leaflet IL04012014Z.

NOTICE

Internal relay K1 is looped with the expansion module, meaning it can only conduct a lower current (≦ 1 A).

DANGER

Dangerous voltage!

Expansion module DXC-EXT-2RO1AO must not be placed into operation until all mounting and installation work has been completed. Any other use will be considered to be an inappropriate use.

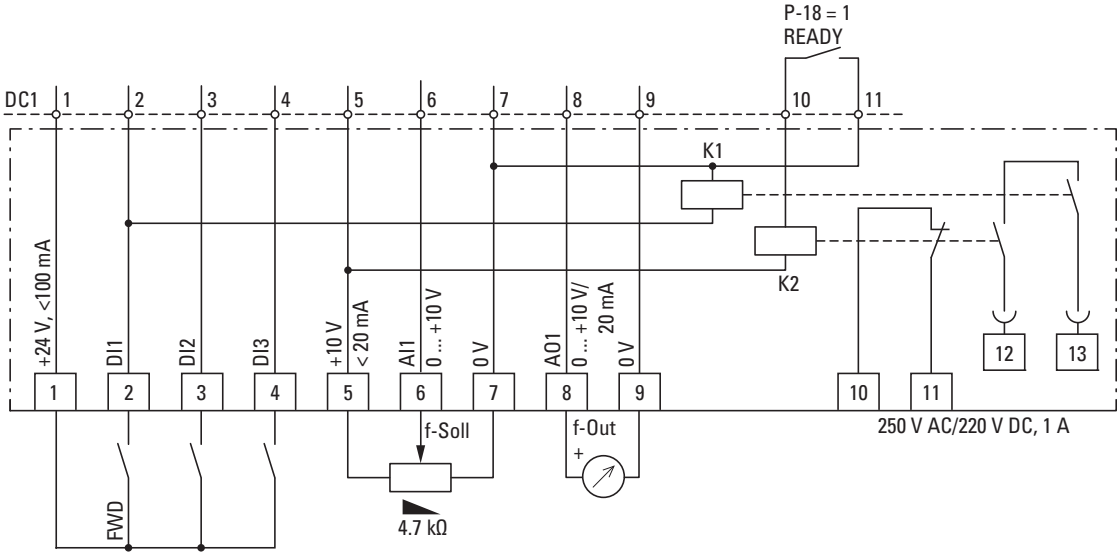

Figure 94: Block diagram DXC-EXT-2RO1AO

Parameter Definition

P-18 = 1: READY, variable frequency drive ready for operation

Typical operating mode (DXC-EXT-2RO1AO control signal terminals):

- 12/13 closed → There is an enable signal for operation (FWD), READY and RUN messages: Green indicator light, for example
- 10/11 closed → Error message (not READY): Red indicator light, for example

→ P-18 can also be used to select other operating messages for the DC1 variable frequency drive's internal relay (RO1)

7.10 General accessories (List)

Table 74: PowerXL accessories

Part no.	Description	Document
DX-KEY-LED2 DX-KEY-OLED	External keypad	AP040022, IL04012020Z
DX-NET-SWD3	Interface card for connecting to a SmartWire-DT network	MN04012009Z, IL04012025Z
DX-CBL-PC-3M0	Wired communication between variable frequency drive and PC	MN040003
DX-SPL-RJ45-2SL1PL	RJ45, 8-pin, splitter, 2 sockets, 1 plug on short connection cable	IL04012023Z
DX-SPL-RJ45-3SL	RJ45, 8-pin, splitter, 3 sockets	IL04012023Z
drivesConnect	PC parameter configuration software for variable frequency drives, with integrated oscilloscope function, drive control function, and function block creation for DA1	MN040003

→ If you intend to use an external keypad and/or a parameter copying stick with a DC1-…E1 variable frequency drive, please note that only models DX-KEY-LED**2** and DX-COM-STICK**2** and DX-COM-STICK**3** will work.

DX-KEY-OLED can be used, but requires an update first.

Index

A
Abbreviations 8
AC motors 59
AC supply systems 36
Accessories 194
Air circulation 62
Application note 215

B
Baffle 63
Base-mounted filter 202
Block diagrams 106
Brake chopper 14, 15
Braking resistances 45, 206
Bus termination resistor 103
Bypass circuit 52

C
Cable brackets 75
Cable cross-sections 39, 192
Cable routing 70
Cable screw glands 90
Catalog number selection 15
Checklist 120
Commissioning 120
Connecting the power section 79
Connection 59
    digital input 100
    to power section 79
Connection terminals 80
Control cables 94
Control inputs 95
Coupling/interfacing components 215
Customer support 24, 29

D
DC link voltage 33, 45
Degree of protection 14, 22, 23
Delta circuit 56
Derating 28
Device series
    DC1-12... . . . . 17, 184
    DC1-1D... . . . . 16, 183
    DC1-32... . . . . 18, 185
    DC1-34... . . . . 20, 187
Digital Input 100
Digital output 100
Dimensions 189
Disconnecting device 40
Display unit 15
DS 8
DXC-EXT-2RO1AO 219
DXC-EXT-IO110 96
DXC-EXT-IO230 96
DX-KEY-LED2 . . . . . 129, 221
DX-KEY-OLED 129, 221

E
Earth-fault protection 72
EASY-NT-R 103
Electrical power network 36
EMC (electromagnetic compatibility) 8, 69
EMC mounting adapter 65
Enclosure versions 60
Engineering 34
Equipment supplied 12
Error message, acknowledge 157
Error Messages 157

F
Fault Diagnostics 161
Fault log 158
FE, see functional earth 8
Features 16
Fixing
    on mounting rail 65
    with screws 64
Frequency 37
FS (frame size) 8
Functional earth 8
Fuses 40, 194
FWD (forward run) 8

G
Gland plates 76
GND (ground) 8
Ground contact currents 78

H
Harmonics 38
Hazard warnings
    of material damages 7
    of personal injury 7
    Operational 121

Help leaflets 135
Hotline (Eaton Industries GmbH) 33

I
IGBT 8
Inching operation 122, 197
Inspection 32
Installation 60
Instruction leaflets 60
Insulation tests 118
Internal DC link capacitors 33
Internet addresses 8

K
Keypad 129

L
Leakage currents 41, 69
LED status indication 129
Liquid fuses 194
List of revisions 6
Load groups 206

M
Magnet system 34
Mains chokes 200, 201
Mains connection 36
Mains contactors 42, 197
Mains supply voltages 9
Mains voltage 9, 27, 37
Maintenance 32
Manufacturing date 14
Minimum clearances 64
Motor cable 87
Motor choke 48, 210
Motor earthing 71
Motor protection function 138
Motor selection 55
Motor terminal box 87
Mounting 61
Mounting position 60, 62

N
Nameplate 13
Network configuration 36

P
Parameter access, extended 158
Parameter Groups 127
Part no. 14
PDS (power drive system) 8, 34
PE (Protective Earth) 8
PES (protective earth shielding) 8
Power networks 9, 36
Protective devices 194
Protective earth 8, 71

R
Radio interference suppression filter 202
Rated motor current 27
Rated operational data 13, 178, 182
Rating plate 56
Reactive power compensation devices 38
Reset 130
Residual current circuit-breakers 41
Residual Current Device 41
REV (reverse run) 8
RJ 45 interface 22, 101
RJ45-Schnittstelle 102

S
Screen braid 87
Screened cable 74
Screened motor cable 88
Screws 65
Selection criteria, for variable frequency drives 27
Serial Number 14
Service 33
Setting parameters 131
Shielding 74
Side-mounting filter 202
Signal cables 70
Sine filter 212
Sizes 189
Standards 119
IEC 60364 I
IEC 60364-4-41 I
IEC/EN 60204-1 I
Star connection 56
Storage 32
Stripping lengths 92
Supply voltage 27
Switch-disconnectors 51
Switching frequency 202
System overview 11

T
Technical data 178
Terminal capacities 92
THD (Total Harmonic Distortion) 38

Thermistor connection 105
Three-phase motor 56
Tightening torques 65
Transistor output 97

U
UL (underwriters laboratories) 8
Units of measurement 9

V
Voltage balance 37
Voltage categories 24
Voltage drop, permissible 9
Voltage source, external 96

W
Warranty 33
Wiring system 27, 56

Eaton is an intelligent power management company dedicated to protecting the environment and improving the quality of life for people everywhere. We make products for the data center, utility, industrial, commercial, machine building, residential, aerospace and mobility markets. We are guided by our commitment to do business right, to operate sustainably and to help our customers manage power – today and well into the future.
By capitalizing on the global growth trends of electrification and digitalization, we're accelerating the planet's transition to renewable energy sources, helping to solve the world's most urgent power management challenges, and building a more sustainable society for people today and generations to come.

For more information, visit Eaton.com.

Eaton Industries GmbH
Hein-Moeller-Str. 7–11
D-53115 Bonn

© 2024 Eaton
All Rights Reserved
06/26 MN040059EN